NEW EQUIPMENT & SYSTEM APPROVAL PROFORMA

Ref: 11/38787

Note: the prompts given below are only a guide to the information required for approval. Dependent on the type of equipment or system that requires approval delete any section that is not applicable or include additional information if necessary. Mandatory fields are marked with an asterisk (*).

1 **Equipment or System to be approved** *

Schwihag Switch Rollers incorporated onto slide plates.

2 **Originator** *

Name: Bryan Pieper Company: Southern Engineering Rail Services P/L

3 **Introduction** *

An integrated roller slide baseplate for use in new turnouts or retro fitted to existing turnouts.

4 **Determination of Need** *

This product is an improvement of existing available products and can replace them insitu, and is the only system on the market that allows for both horizontal and vertical roller adjustment to ensure controlled lifting of the switchblade.

5 **Significant Change or Not** *(as determined by the Manager Standards)* *

This change in equipment or system is assessed as minor as the company already supplies products to the Rail Industry.

6 **Review Panel** *(as determined by the Manager Standards)* *

- John Furness - Manager Standards
- Tim Calver - Civil Standards & Technical Services Engineer
- Gunaratnam Jayakumar - Senior Delivery Engineer

7 **Safety**

The product is mounted on the sleeper and fixed with screwspikes in the dowelled hole provided The only moving part of the product is the roller, which forms part of the roller frame, and, is what causes the switch rail to lift during the switch movement operation. If the roller failed and dropped down to its lowest position then the switch rail would simply slide on the chair surface, which is part of the plate assembly.

To date of the 300,000 rollers sold worldwide there have been less than 20 replaced since 1997.

8 **Performance and Suitability**

ARTC have monitored this product since its installation in November 2009 at Sandgate 183 D Pts. following the type approval for trial installation. Following the initial roller settings by SERS, the settings were recorded, a second reading can be taken on 9th August if required to confirm any movement of the roller position in service.

To confirm the performance of the roller, the correct action is to inspect the slide surfaces of each slide plate to look for shiny surfaces, which would indicate the switch rail is sliding on the slide surface instead of the rollers. Alternatively, if a roller has seized then this would be identified by the lack of a shiny band around the roller circumference, and it that case the switch rail would slide over the frozen roller.

(i) **Use in other rail networks**

This product has been used in Queensland Rail since 2003 and FMG Mining since 2010. The product has type approval in Railcorp, copy attached. QR – Robin Stevens.

(ii) **Use in the ARTC network**

This product has been in use in the ARTC network since November 2009 at 183 D Points, Sandgate, NSW.

ARTC signalling staff have stated that they are satisfied with the performance and have not reported any issues with these switch rollers since the installation (see the attached email). There is also no Signal failure TCR raised due to these rollers.

To-date, approximately 200GMT Coal traffic have traversed over this turnout with approx. 150 GMT over through road and approx. 50MGT over turnout road.

The tamping of this turnout has also become more efficient and effective due to fitting these rollers on to base plates.

(iii) **Issues arising from usage of the equipment/system**

Once the plate is installed and the rollers set there is no further maintenance or adjustments necessary, and there have been no adjustments necessary since installation.

(iv) **Changes required to infrastructure or systems for use of the equipment**

There are no changes required to the existing infrastructure or equipment to enable this product to function correctly. As the plates are fitted to sleepers, they do not impede any tamping operations.

9	**Reliability** The product has worked under many conditions ranging from freezing cold to hot and humid tropical conditions. The product is supplied to England, Europe, America, Asia and now Australia. It has been in service in Australian (QR) conditions since 2003 without adjustment or failure.
10	**Maintainability** The product requires no maintenance during its service life. Southern Engineering Rail Services P/L supply in addition to the product, a set of setting gauges and full training of an appointed Signal group person so that they can set rollers, adjust them if ever necessary, or set new rollers in newly installed turnouts after tamping has been finalised. This person would be responsible for periodic checking of product to confirm no movement has taken place. In addition to this Southern Engineering Rail Services P/L can also provide paperwork form that record each turnout and the settings that were finalised on the day of commissioning, so that reference can be made to this document from time to time to ensure no adjustment has been made by "others" when conducting other works in or around the turnout area. Alternatively, this is a service that can be offered and in fact do provide in Britain and most of Europe.
11	**Approval** * Schwihag integrated roller slide baseplates (as per Schwihag drawing no. P6161) for use in new turnouts or retro fitting to existing turnouts throughout the ARTC Network (excluding CRN).
12	**Conditions of Approval** * • Installation and maintenance as per manufacturers requirements • Include in inspection regimes • Include in maintenance regimes

13	**Does the Originator accept the additional Conditions of Approval as set by the Review Panel:**	Yes	☑	No	☐	N/A	☐

14	**Sign off**		***ARTC office use only***
	Review Panel:		
	John Furness	Date:	28/6/2011
	Tim Calver	Date:	27/6/2011
	Gunaratnam Jayakumar	Date:	24/6/2011.

SCHWIHAG

Switch Roller setting instructions.

1. Check gap under rail foot on each slide plate and record details when switch blade is in closed position.
2. Starting at 1st roller with bolts only hand tight and rollers set at 0, slide roller cradle up to rail foot until the 1mm feeler gauge is between roller and rail foot.
3. Set roller closer to rail at pre measured gap + 1.5mm and the other roller at gap + 3mm and tighten bolts to 70Newton metres.
4. Repeat this for all plates on closed switch side of the turnout.
5. Throw switch 2 or 3 times to bed blade in and recheck gap under open switch to ensure a gap on every slide plate.
6. Repeat same for other switch blade.
7. Record setting adjustments and final gaps for records.

If required reset roller to higher setting if gap is not enough under switch blade on slide plate.

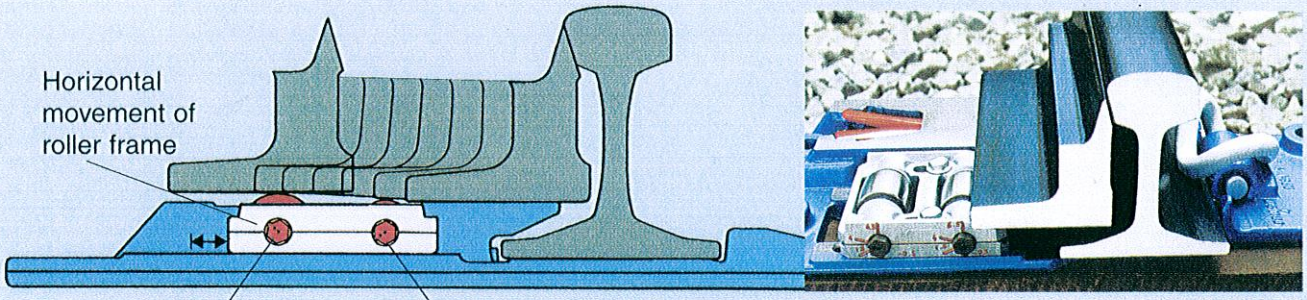

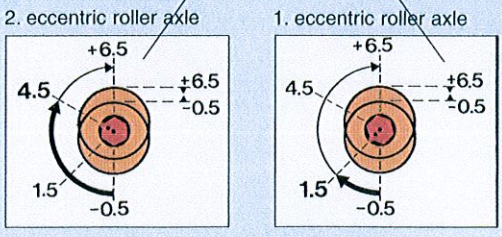

An eccentric axle ensures vertical heigth adjustment of the rollers

Rollers may be adjusted vertically from -0.5 to +6.5 mm ensuring the correct vertical clearance between the switch rail and slide plate

Phone: 61 2 4283 9100
Facsimile: 61 2 4283 9151
Mobile: 61 418 677 062
Email: bryan.pieper@sesgroup.com.au
Website: www.sesgroup.com.au

Bryan Pieper
Marketing Manager
Southern Engineering Rail Services

Southern Engineering Services Pty. Ltd.
503-505 Princes Highway Fairy Meadow NSW 2519 Australia
PO Box 193 Fairy Meadow NSW 2519 Australia

1 Only for new turnouts:
Ensure the slide chair plates are cleaned of ballast dust and debris. Then remove the metal covers by folding up the two turned down ends.

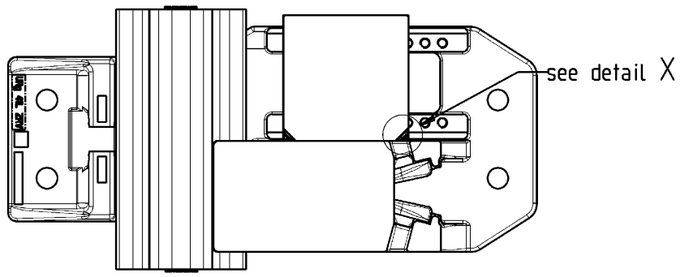

detail X
scale 1:1

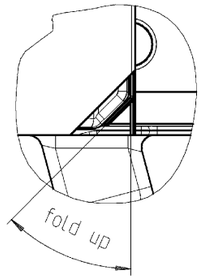

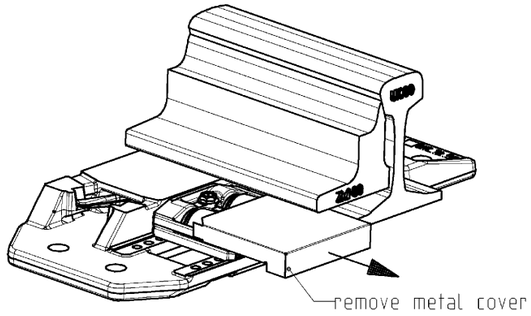

bracing frame with rollers

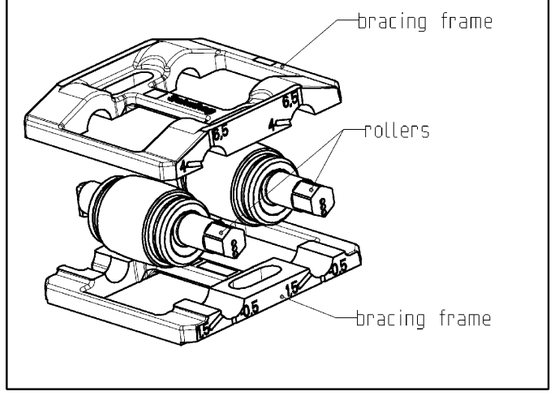

2 After loosening the bolts fixing the rollers and bracing frame to the slide chair plate, the frames with the rollers can be moved horizontally (To set the rollers the switch blade must be in the closed position).

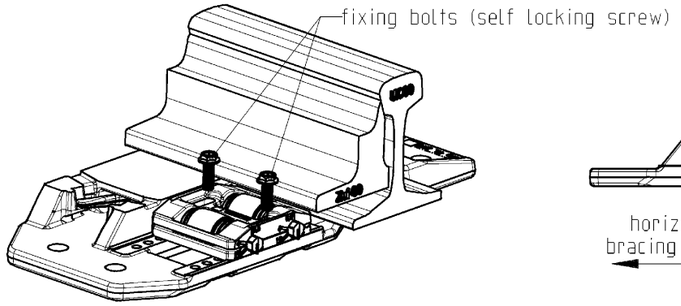

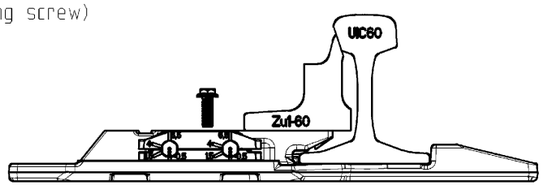

horizontal movement of
bracing frames with rollers

3 Adjustment of the rollers is to be executed by turning the rollers with the ring or open spanner (SW 17). Usually the height of the first roller is 2-2.5 mm above the slide surface and the second roller 3-4 mm. Consider the marking on the bracing frames. The bracing frames should be moved until the clearance between the inner roller and the rail foot of the closed switch rail is 1 mm. Control the clearance with the 1 mm thick feeler gauge.

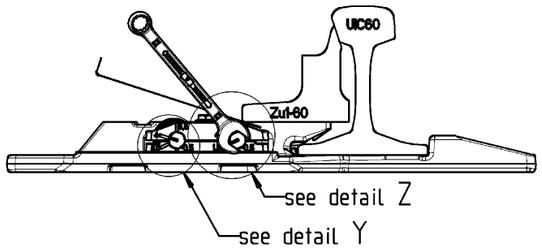

detail Y
scale 1:1

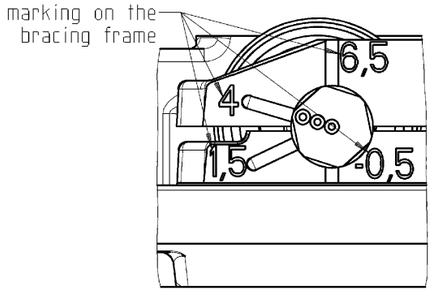

detail Z
scale 1:1

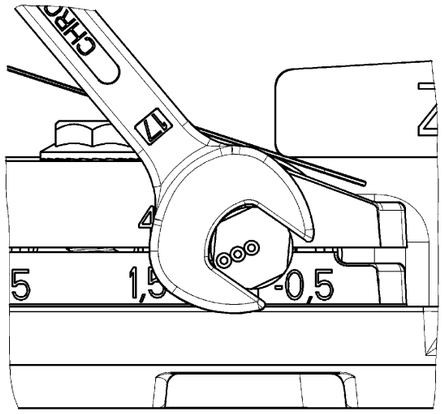

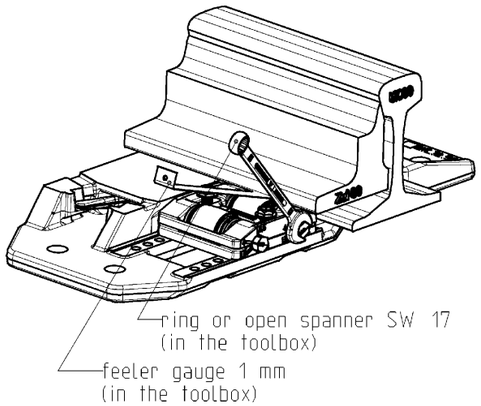

4 Re-check the clearance between the 1st roller and the rail foot as well as the height of the 1st roller (2-2.5 mm) and the 2nd roller (3-4 mm) again after tightening the bolts. Tighten the two bolts to 70 Nm by means of the torque wrench.

5 Move the switch rail across the rollers to the fully open position checking contact is made with the rollers resulting in a 2 to 3 mm clearance between the switch rail and the slide chair plate platform. Should the desired clearance not be achieved then adjust accordingly.

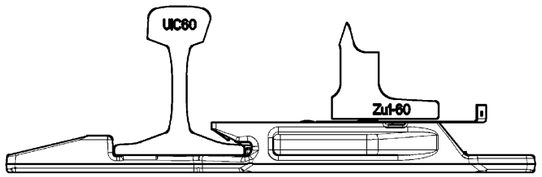

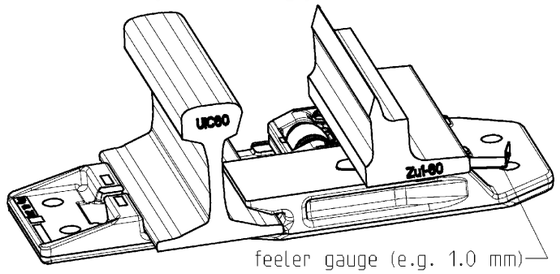

6 Where there is only a single roller this should be adjusted in a similar manner to the double roller plate, however the roller height should be set to 3.5 to 4.5 above the slide chair plate platform. If the switch rail is hogged vertically and not sitting on the sliding surface in the closed position then the gap between the raised roller and the switch rail should be 1 mm greater than the clearance (gap) between the switch rail and the slideplate surface. This ensures that the weight of the vehicle forcing the switch rail onto the slideplate cannot damage the roller assembly.

7 Repeat for opposite half set of switches (see 1-5).

tools required for setting rollers:
- 17 mm ring or open spanner
- torque wrench (adjustable to 80 Nm)
- set of feeler gauges (0.5; 1.0; 1.5; 2.0; 3.0; 4.0 mm)
- medium size screwdriver
- small hammer

A complete toolbox can be supplied by Schwihag.

Please contact PWMM
for technical support.
Tel: 01246/567219
Fax: 01246/567440
e-mail: pwmm@dial.pipex.com

applicable for:	
switch	-
tongue rail	-
check rail	-
inclination	-
pad [mm]	-
inner bracing	-
outer bracing	-
flangeway [mm]	-
superelevation [mm]	-
shim [mm]	-
-	

method E ISO/R 128

issue	alteration	date	name
1	Lfd. Nr.: 237	01.10.99	Hd

Schwihag
Gesellschaft fuer Eisenbahnoberbau mbH
CH-8274 Taegerwilen, Lebernstrasse 3
phone: ++41/71/666 88 00
facs: ++41/71/666 88 01
e-mail: info@schwihag.com
web: www.schwihag.com

adm. diviation	surface
-	
-	-
-	

	date	name
drawn	16.06.99	Heidel
proved	30.06.03	Wientges
norm	01.07.03	Meyer
copied		

file 2D/3D Typ: ASSEM
URG41L_ZRV_KOMPLETT-EINBAUANL
cat. -
source -

scale 1:5
weight Kg
material -

designation
setting of the rollers in the Schwihag integrated roller slide chair plates

drawing no. P6161
page 1 / 1 pg.
repl. for: -
repl. by: -

PACIFIC RAIL ENGINEERING PTY LIMITED
ACN 053 116 117 ABN 57 053 116 117
24 DAISY STREET, REVESBY NSW 2212 AUSTRALIA
P.O. BOX 4454 MILPERRA NSW 1891
TELEPHONE: +61 2 9783 6300 FAX: +61 2 9774 4377

FORM NO: SFM:F344
ISSUE NO: 1
DATE: 17/03/2011

SCHWIHAG ROLLER SETTING / DATA SHEET

EXISTING CLOSED SWITCH / SLIDE PLATE FIT

SITE ADDRESS	
CUSTOMER	
SWITCH TYPE	
BEARER TYPE	
POINT NO.	
OTHER NOTES	

BEARER POSITIONS SUPPORTING ROLLER PLATES (D = Double roller, S = Single Roller)

← Switch Tip ... Heel End →

1	2	3	4	5	6	7	8	9	10	11	12	13	14	15	16	17	18	19	20	21	22	23	24	25	26	27	28	29	30

EXISTING CLOSED SWITCH / SLIDE PLATE FIT

LH SWITCH (A)	
LH SWITCH (B)	
LH SWITCH (C)	
RH SWITCH (A)	
RH SWITCH (B)	
RH SWITCH (C)	

A = GAP BETWEEN THE ROLLER AND THE FOOT EDGE OF THE SWITCH (SHOULD BE 1 MM)
B = GAP BETWEEN THE SWITCH FOOT AND SLIDE PLATE
C = GAP BETWEEN THE SWITCH AND STOCK RAIL

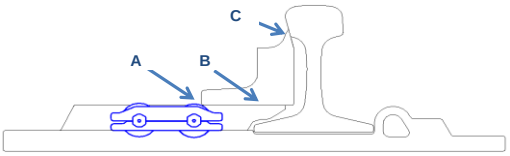

ROLLER SETTING HEIGHT

LH SWITCH (D)	
LH SWITCH (E)	
RH SWITCH (D)	
RH SWITCH (E)	

D = THE OUTSIDE ROLLER SHOULD BE 3-4 MM ABOVE SLIDE PLATE SURFACE
E = THE INSIDE ROLLER SHOULD BE 2-2.5 MM ABOVE THE SLIDE PLATE SURFACE

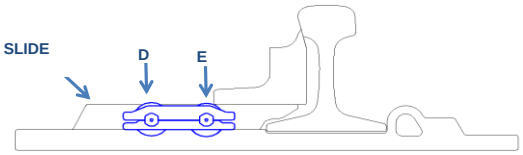

LIFT OF OPEN SWITCH BLADE FOLLOWING ROLLER SETTINGS

LH SWITCH	
RH SWITCH	

NOTE:
WHERE THERE IS ONLY ONE ROLLER, THE HEIGHT SHOULD BE ADJUSTED
TO 3.4 MM ABOVE THE SLIDE PLATE SURFACE

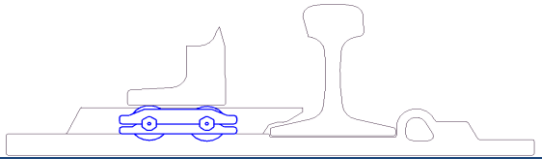

COMMENTS:

SITE CONTACT:

.....
CLIENT REPRESENTATIVE

SIGNED BY:

.....
PRE REPRESENTATIVE

.....
DATE

C.A.D DRAWING DO NOT AMMEND MANUALLY

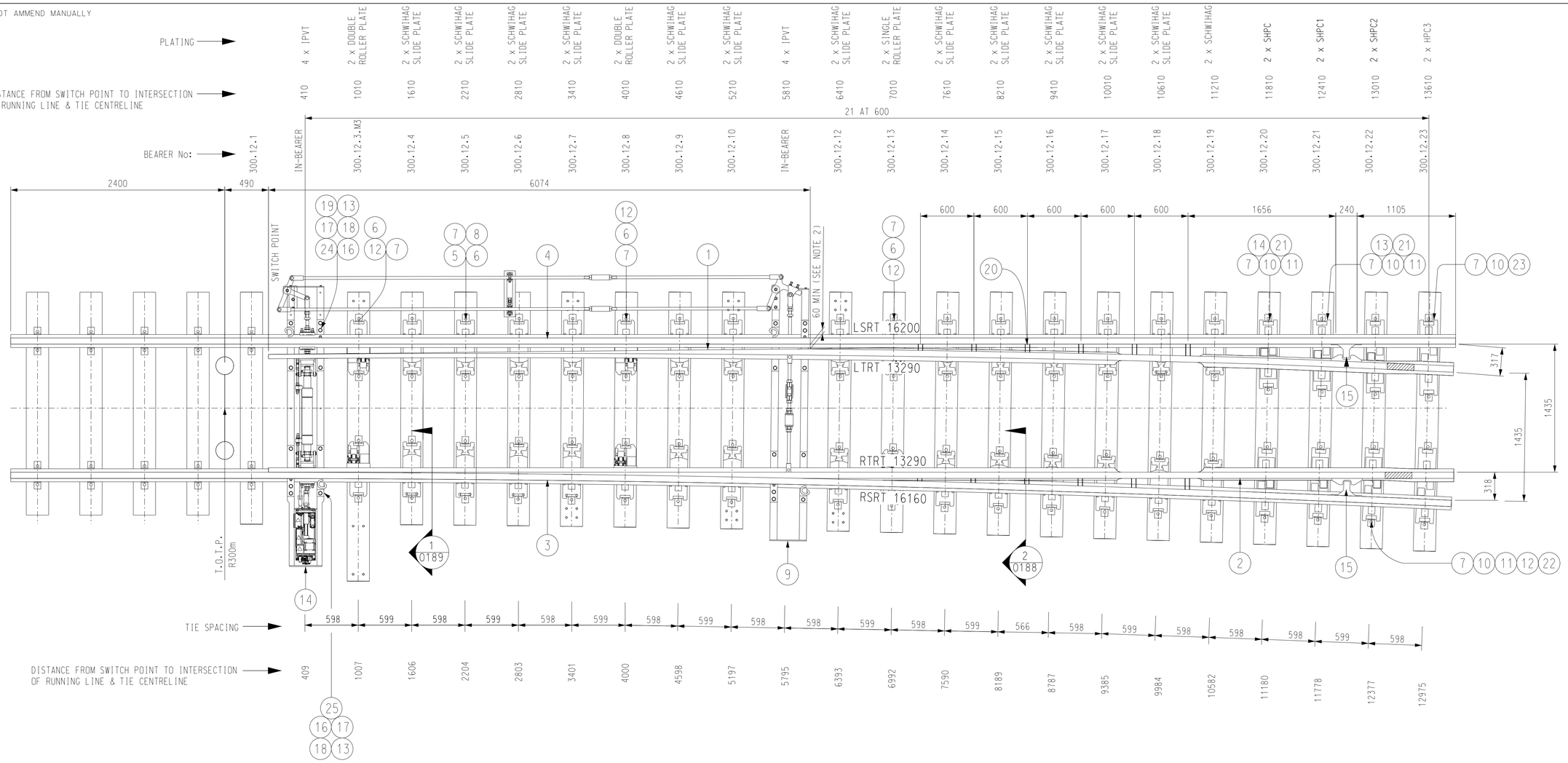

RH R300 TANGENTIAL SWITCH ASSEMBLY (LHTO MIRROR IMAGE)

	ITEM NUMBER	QUANTITY	UNIT	ITEM NAME	DRAWING
25	01.P.5202	4	EA	IN-BEARER PVT PLATE IPVT (LUG)	PRE01-WD-0545
24	01.P.5201	4	EA	IN-BEARER PVT PLATE IPVT (HOLES)	PRE01-WD-0546
23	01.K.4046	2	EA	HPC3 BASE PLATE	PRE01-WD-0774
22	01.K.4045	2	EA	SHPC2 BASE PLATE	PRE01-WD-0774
21	01.K.4044	2	EA	SHPC AND SHPC1 BASE PLATE	PRE01-WD-0774
20	01.K.3418	12	EA	SWITCH STOPS SWS2A TANGENTIAL	PRE01-WD-0188
19	01.K.3035	40	EA	M24 FLAT WASHER ZINC	-
18	01.K.3322	10	EA	NUT M24 NYLOC	-
17	01.K.3037	30	EA	M24 x 100 HEX HD BOLT ZINC	-
16	01.D.56	16	EA	40mm INSULATING BUSH (SIEMENS)	-
15	01.J.2230	2	EA	HEELBLOCK ASSEMBLY	PRE01-WD-0539
14	AO-G1748-001_F	1	EA	SIEMENS IN-BEARER (FRONT DRIVE) - SPHEROLOCK	AO-G1748-376
13	01.D.38	8	EA	STANDARD INSULATING PAD (SIEMENS)	-
12	01.Y.8399	6	EA	SCHWIHAG ROLLER PLATE	-
11	01.L.4014	12	EA	LUG PANDROL PL70034C	-
10	01.P.5260	28	EA	LUG PANDROL PL0034-F	-
9	AO-G1748-001_F	1	EA	SIEMENS IN-BEARER (BACK DRIVE) - STANDARD	AO-G1748-270
8	01.L.5034	26	EA	5mm EVA RAIL SEAT PAD	P8206
7	01.L.4010	108	EA	PANDROL CLIPS - e2003	-
6	01.L.5033	32	EA	SCHWIHAG CLIPS	-
5	01.P.5029	26	EA	SCHWIHAG - PRE SLIDE PLATES	PRE01-WD-0767
3,4	01.Y.6055	1	EA	STOCKRAIL RIGHT HAND RSRT - LEFT HAND LSRT	THIS DRAWING
2	01.Y.8349	1	EA	RIGHT HAND SWITCH RAIL - RTRT	THIS DRAWING
1	01.Y.8348	1	EA	LEFT HAND SWITCH RAIL - LTRT	THIS DRAWING

NOTES:

1. - LAYOUT BASED ON RAILCORP DRAWING CV0479044 AND CV0479045.

2. - UNDER NORMAL CONDITIONS, WHERE 60mm OPENING IS REQUIRED AT BACK OF SWITCH AND STOCK RAIL ASSEMBLY, NO GAP SHOULD BE PRESENT ON OPPOSITE STOCK RAIL AND SWITCH ASSEMBLY.

REV	DATE	BY	CKD	APP	DESCRIPTION
2	01MAR2011	FT	AS	KB	GENERAL UPDATE
1	05NOV2010	FT	MT	KB	EVA RAIL SEAT PAD ADDED

DATE	BY	CHK	APP	DESCRIPTION

DESIGNED BY
DRAWN BY
CHECKED BY
APPROVED BY
DATE

PACIFIC RAIL ENGINEERING PTY LIMITED
ACN 053 116 117 ABN 57 053 116 117
24 DAISY STREET, REVESBY NSW 2212 AUSTRALIA
P.O. BOX 4454 MILPERRA NSW 1891
TELEPHONE: +61 02 9783 6300 FACSIMILE: +61 02 9774 4377
EMAIL: PRE@PACIFICRAIL.COM.AU

60KG RH R300 TANGENTIAL
STOCK RAIL AND SWITCH ASSEMBLY
GENERAL ARRANGEMENT
TYPE TSS300T2-132DEF

MATERIAL: 60kg RAIL
CAD DATE: 05.11.2010
SCALE: N.T.S.
DRAWING NUMBER: PRE01-GA-0043-14
SHEET NO: 1 OF 1
STAGE CODE: C
REV: 2

FULL SIZE A1

PRINTED: $DATE$ $TIME$
SFMF335

Sheet No. 0002

Schwihag AG

SCHWIHAG ROLLER SETTING / DATA SHEET

CUSTOMER	SWITCH TYPE	SETTING DATE	SITE ADDRESS & CONTACT	BEARER	POINT END	ZONE
		7-Feb-10	Site: Sandgate, Newcastle Contact:	C	183D	Australia

BEARER POSITIONS SUPPORTING ROLLER PLATES

← Switch Tip (1) Heel End →

1	2	3	4	5	6	7	8	9	10	11	12	13	14	15	16	17	18	19	20	21	22	23	24	25	26	27	28	29	30
	x						x							x							x								

EXISTING CLOSED SWITCHRAIL / SLIDE PLATE FIT					
LH SWITCHRAIL	0.0 1.5	0.0	0.5	0.0	
RH SWITCHRAIL	0.0 3.0	0.0	0.0	0.0	

ROLLER SETTING HEIGHT					
LH SWITCH RAIL	4.0 4.5	3.0 3.5	3.0	3.0	
RH SWITCHRAIL	4.0 4.5	3.0 3.5	4.0	4.0	

LIFT OF OPEN SWITCHBLADE FOLLOWING ROLLER SETTING: -					
LH SWITCH RAIL	0.0 2.5	3.5	2.0	1.5	
RH SWITCHRAIL	0.0 4.5	2.0	3.5	1.5	

CLEARANCE-NO1 STRETCHER BAR TO STOCKRAIL	LH = N/AN/A RH = N/AN/A	CLAMPLOCK ONLY - CLEARANCE - TIE BAR HYDRAULIC ACTUATOR PACKAGES	N/A

COMMENTS:

RH Switchblade twisted 1.5mm

Last slideplate is on bearer No. 28

Point machine rodding limits the list of the switch tip

SITE CONTACT:

.....

CLIENT REPRESENTATIVE

SIGNED BY:

.....

SCHWIHAG REPRESENTATIVE

5-Mar-10

DATE

PWMM LIMITED
10 Harewood Road,
Holymoorside,
Chesterfield, S42 7HT.
Tel : 01246 567219
Fax:01246 567440