(No 39)

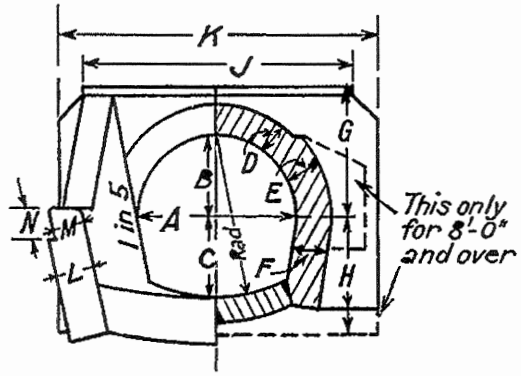

HALF ELEVATION HALF SECTION

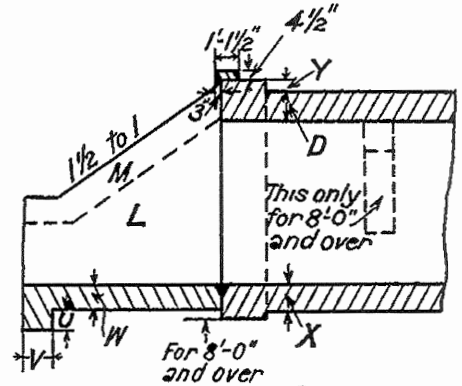

LONGITUDINAL SECTION

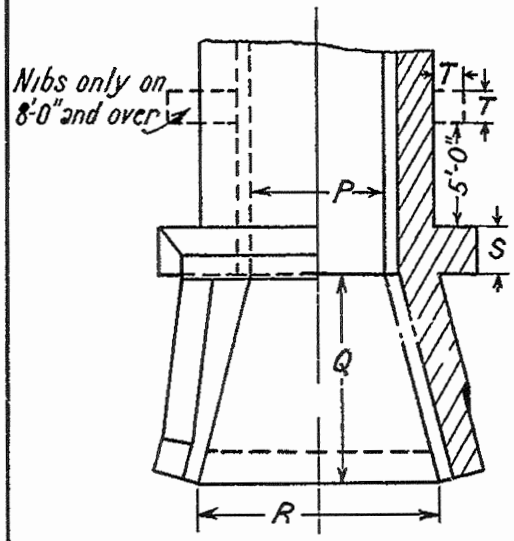

PLAN

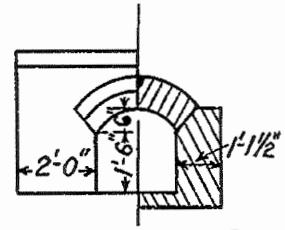

HALF ELEVATION HALF SECTION

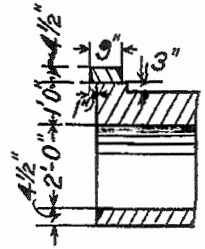

LONGITUDINAL SECTION

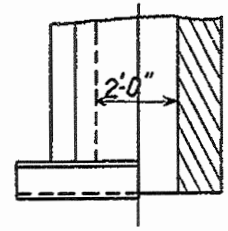

PLAN

2'-0" CULVERT

	1	2	3	4	5	6	7
A	10'-0"	8'-0"	8'-0"	6'-6"	5'-0"	4'-0"	3'-0"
B	5'-0"	4'-0"	4'-0"	3'-3"	2'-6"	2'-0"	1'-6"
C	5'-0"	4'-0"	1'-9"	3'-3"	2'-6"	2'-0"	1'-6"
D	1'-10½"	1'-6"	1'-6"	1'-6"	1'-1½"	1'-1½"	1'-1½"
E	2'-3"	1'-10½"	1'-6"	1'-6"	1'-1½"	1'-1½"	1'-1½"
F	2'-3"	1'-10½"	1'-6"	1'-6"	1'-6"	1'-1½"	1'-1½"
G	8'-0"	6'-4½"	6'-4½"	5'-7½"	4'-6"	4'-0"	3'-6"
H	6'-9"	5'-4½"	2'-0"	3'-9"	3'-3"	2'-6"	2'-0"
J	16'-6"	13'-6"	13'-6"	11'-6"	9'-6"	8'-0"	6'-6"
K	20'-0"	16'-0"	15'-0"	13'-0"	10'-0"	8'-0"	6'-6"
L	1'-10½"	1'-10½"	1'-6"	1'-6"	1'-6"	1'-1½"	1'-1½"
M	1'-6"	1'-6"	1'-6"	1'-1½"	1'-1½"	1'-1½"	1'-1½"
N	1'-6"	1'-6"	–	1'-0"	1'-0"	–	–
P	8'-6"	6'-10"	7'-9"	5'-7"	4'-4"	3'-5"	2'-6"
Q	13'-0"	10'-0"	10'-0"	8'-6"	7'-0"	6'-0"	5'-0"
R	14'-0"	12'-0"	11'-9"	9'-0"	7'-6"	6'-0"	4'-6"
S	2'-7½"	2'-3"	1'-10½"	1'-10½"	1'-6"	1'-6"	1'-6"
T	1'-10½"	1'-6"	1'-6"	–	–	–	–
U	1'-0"	1'-0"	1'-0"	1'-0"	1'-0"	1'-0"	1'-0"
V	2'-0"	1'-6"	1'-6"	1'-6"	1'-6"	1'-3"	1'-3"
W	1'-3"	1'-0"	1'-0"	1'-0"	1'-0"	9"	9"
X	1'-6"	1'-1½"	1'-1½"	1'-1½"	1'-1½"	9"	9"
Y	9"	6"	6"	6"	6"	6"	6"

EDMS CV0023946

N. S. W. R.

STANDARD BRICK CULVERTS

RLB 11.12.31

Chief Civil Engineer

S.T. 73

WARNING SCANNED IMAGE

Standard brick arch culvert extensions AC-001

NOTE:

EXTENSIONS TO BE ON SAME LINE GRADE AS ORIGINAL CULVERT

ENSURE RUBBER RINGS ARE USED

ENSURE CONCRETE IS VIBRATED UNDER PIPE CONNECTION TO TO B.A.C. FOR MAXIMUM SUPPORT

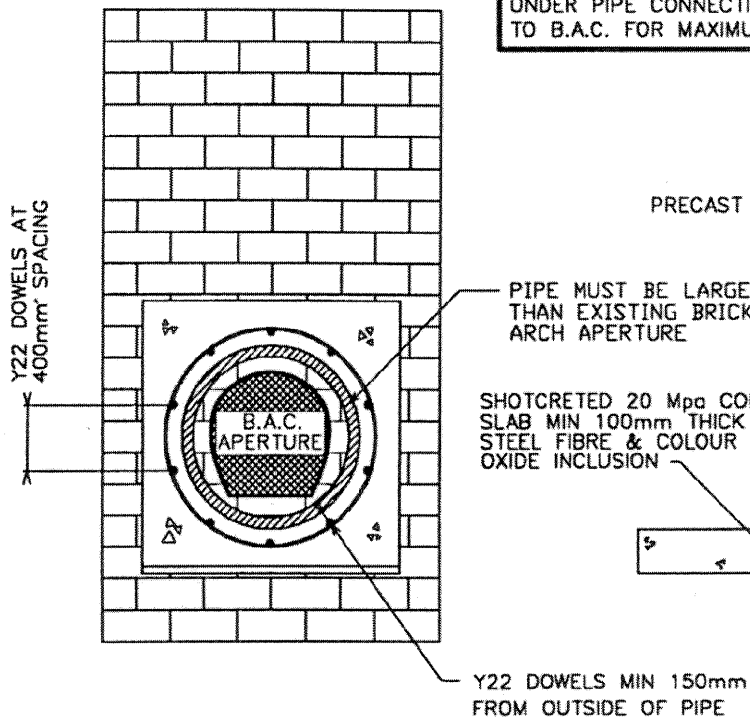

FRONT SECTION A–A

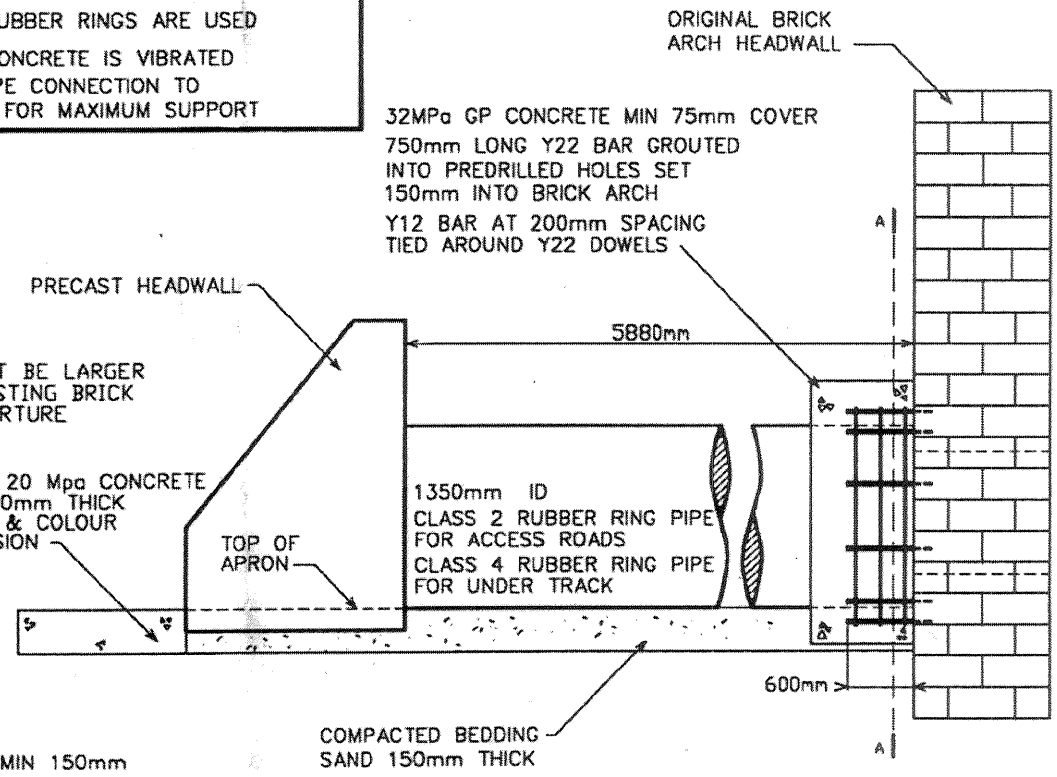

SIDE VIEW

ARTCN3050016001

ARTC PLAN NUMBER

Itemref	Quantity	Title/Name, designation, material, dimension etc			Article No./Reference	
Designed by D. KNEE		Checked by	Approved by – date	Filename EXTN_A3	Date 31/7/00	Scale NTS
Owner RAIL SERVICES AUSTRALIA				Title/Name CULVERT EXTENSION TO EXISTING BRICK ARCH CULVERT (B.A.C.) – 91.950km UP SIDE		
				Drawing number 00/FRU/DK01	Edition	Sheet 1/1

Revision No./Note	Date	Signature	Checked

Standard brick arch culvert extensions AC-002

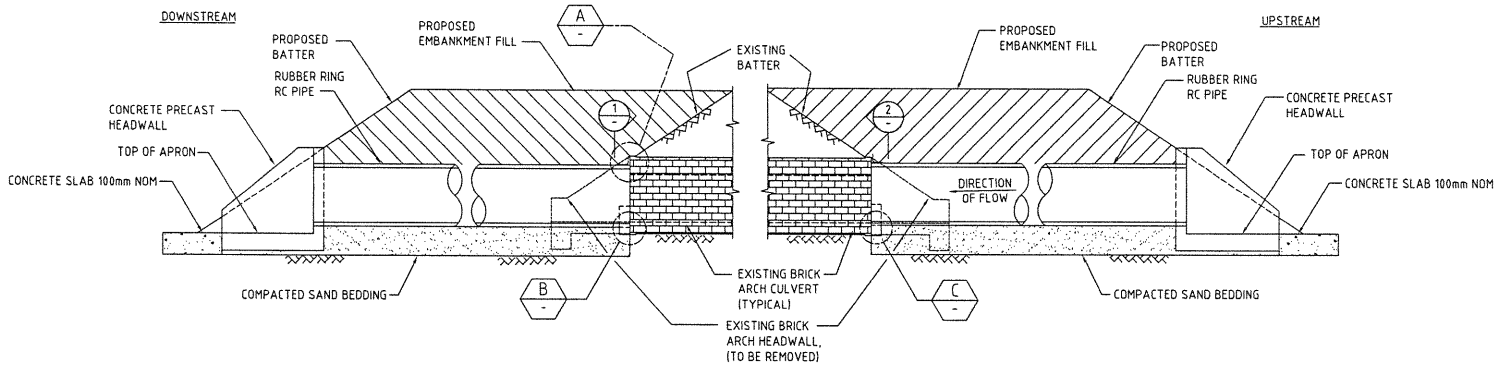

CULVERT ELEVATION - (SHOWING UPSTREAM AND DOWNSTREAM EXTENSIONS)
SCALE 1:50

NOTES

1. FOR CULVERT EXTENSION USE ROCLA RC PIPE OR EQUIVALENT.
2. BEDDING MATERIAL TO BE PROPERLY COMPACTED.
3. PIPE EXTENSION DIAMETER TO BE LARGER THAN EXISTING CULVERT
4. PIPE EXTENSIONS TO BE ON SAME GRADE LINE AS EXISTING CULVERT.
5. GEOTEXTILE FABRIC TO BE FIXED TO EXPOSED OUTER PERIMETER OF PIPE EXTENSION AT JOINT WITH EXISTING CULVERT.
6. PIPE CLASS TO BE DETERMINED TO SUIT INSTALLATION CONDITIONS INCLUDING HEIGHT OF EMBANKMENT FILL OVER PIPE.

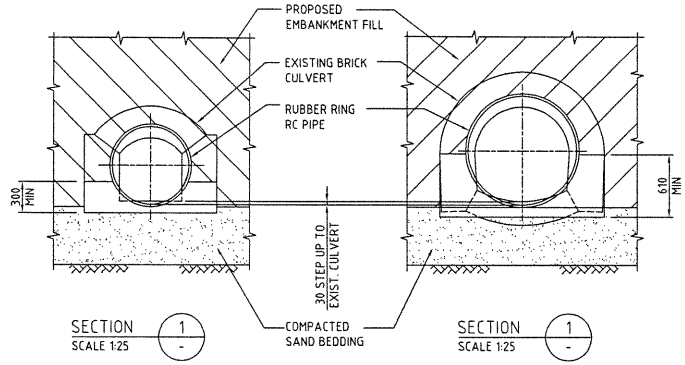

(FOR R. 2' 0" - EXISTING BRICK CULVERT) (FOR R. 3' 0" - EXISTING BRICK CULVERT)

TABLE 1

EXISTING (OVIFORM) BRICK CULVERT	CULVERT EXTENSION INTERNAL DIAMETER (mm)
R. 2' 0" (610mm)	750
R. 3' 0" (914mm)	1050

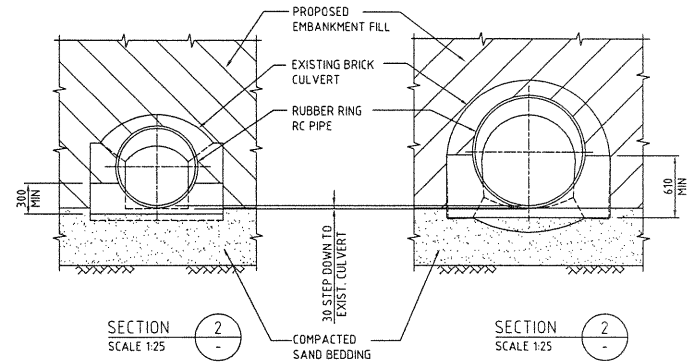

(FOR R. 2' 0" - EXISTING BRICK CULVERT) (FOR R. 3' 0" - EXISTING BRICK CULVERT)

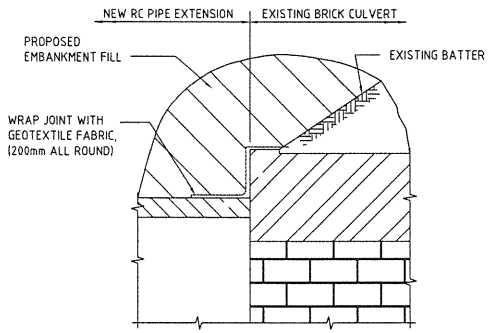

DETAIL A / -
SCALE 1:10

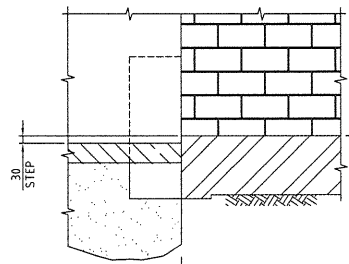

DETAIL B / -
SCALE 1:10

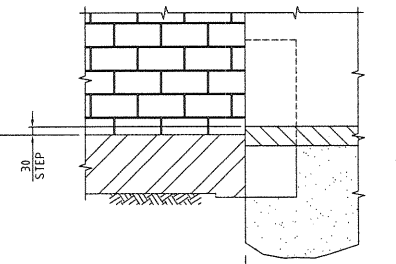

DETAIL C / -
SCALE 1:10

ARTCN3050016002
ARTC PLAN NUMBER

SCALE 1:10 (AT A1 SHEET SIZE)
SCALE 1:25 (AT A1 SHEET SIZE)
SCALE 1:50 (AT A1 SHEET SIZE)

REV	DATE	REVISIONS	DRN	CHK
1	08-03-05	ISSUED FOR COMMENT	KJ	BM

© Cardno (NSW) Pty Ltd All Rights Reserved 2005.
Copyright in the whole and every part of this drawing belongs to Cardno (NSW) Pty Ltd and may not be used, sold, transferred, copied or reproduced in whole or in part in any manner or form or on any media, to any person other than by agreement with Cardno (NSW) Pty Ltd.

This document is produced by Cardno (NSW) Pty Ltd solely for the benefit of and use by the client in accordance with the terms of the retainer. Cardno (NSW) Pty Ltd does not and shall not assume any responsibility or liability whatsoever to any third party arising out of any use or reliance by third party on the content of this document.

CLIENT:

DESIGNED: BM
DRAWN: KJ
CHECKED: BM
RECOMMENDED:
PROJECT MANAGER DATE
DATUM:
COORDINATE SYSTEM:
APPROVED:
PROJECT DIRECTOR DATE

Cardno
Cardno (NSW) Pty Ltd
ABN: 95 001 145 035
Level 3, 910 Pacific Highway, Gordon, NSW Australia 2072
Phone (+61 2) 9496 7700 Fax (+61 2) 9499 3962
Email: sydney@syd.cardno.com.au Web: www.cardno.com.au

RAILCORP
STANDARD BRICK ARCH CULVERT EXTENSION
OPTION 1 - CONCRETE PIPE

DRAWING STATUS:
DRAWING NUMBER: 848636-001
REV: 1

A1 ON ORIGINAL

Standard brick arch culvert extensions AC-003

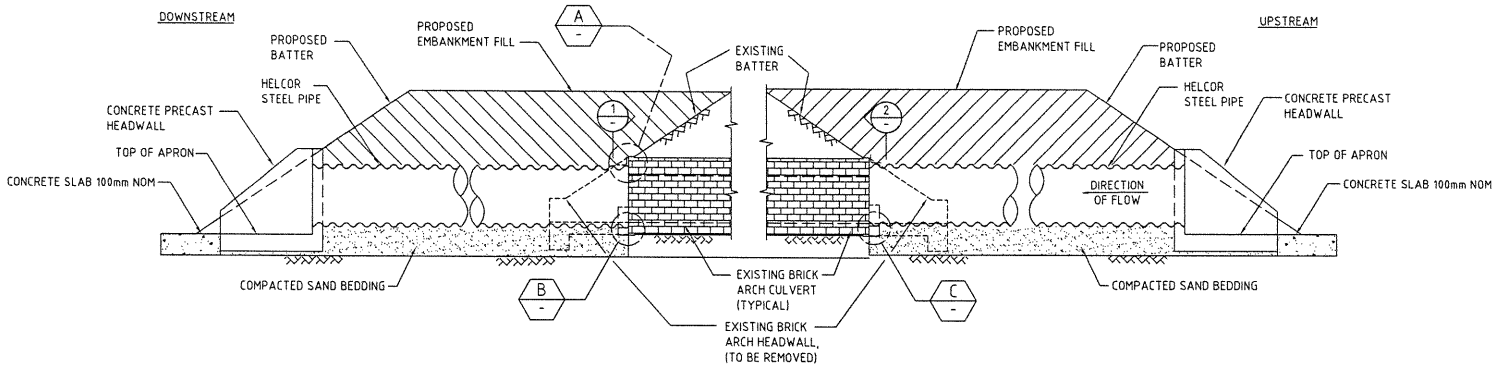

CULVERT ELEVATION - (SHOWING UPSTREAM AND DOWNSTREAM EXTENSIONS)
SCALE 1:50

NOTES

1. FOR CULVERT EXTENSION USE INGAL CIVIL PRODUCTS "HELCOR" PIPE OR EQUIVALENT.
2. BEDDING MATERIAL TO BE PROPERLY COMPACTED.
3. PIPE EXTENSION DIAMETER TO BE LARGER THAN EXISTING CULVERT
4. PIPE EXTENSIONS TO BE ON SAME GRADE LINE AS EXISTING CULVERT.
5. GEOTEXTILE FABRIC TO BE FIXED TO EXPOSED OUTER PERIMETER OF PIPE EXTENSION AT JOINT WITH EXISTING CULVERT.
6. PIPE CLASS TO BE DETERMINED TO SUIT INSTALLATION CONDITIONS INCLUDING HEIGHT OF EMBANKMENT FILL OVER PIPE.

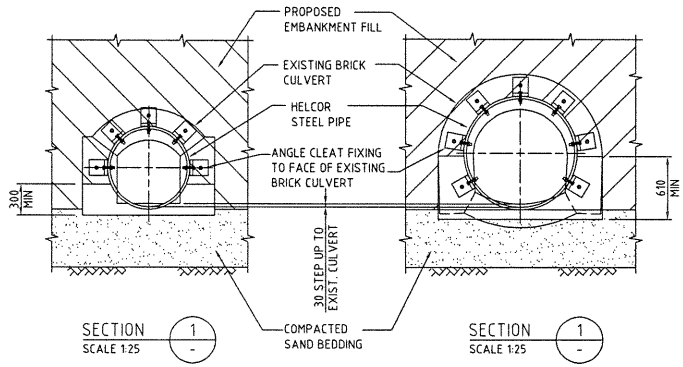

(FOR R. 2' 0" - EXISTING BRICK CULVERT) (FOR R. 3' 0" - EXISTING BRICK CULVERT)

TABLE 1

EXISTING (OVIFORM) BRICK CULVERT	CULVERT EXTENSION INTERNAL DIAMETER (mm)
R. 2' 0" (610mm)	750
R. 3' 0" (914mm)	1050

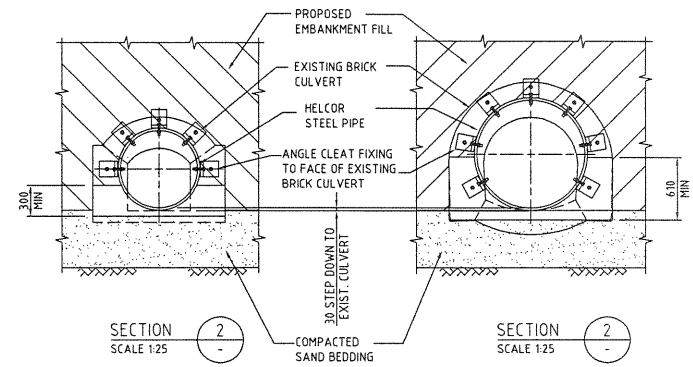

(FOR R. 2' 0" - EXISTING BRICK CULVERT) (FOR R. 3' 0" - EXISTING BRICK CULVERT)

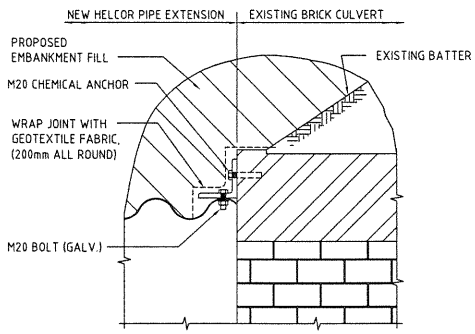

DETAIL A
SCALE 1:10

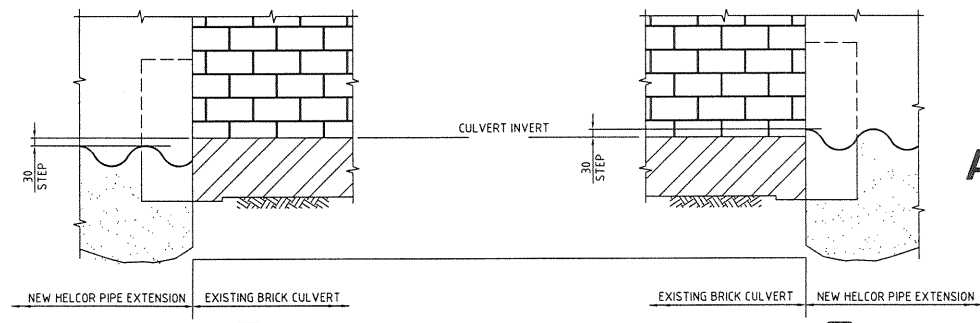

DETAIL B
SCALE 1:10

DETAIL C
SCALE 1:10

ARTCN3050016003
ARTC PLAN NUMBER

SCALE 1:10 (AT A1 SHEET SIZE)
SCALE 1:25 (AT A1 SHEET SIZE)
SCALE 1:50 (AT A1 SHEET SIZE)

REV	DATE	REVISIONS	DRN	CHK
1	08-03-05	ISSUED FOR COMMENT	KJ	BM

© Cardno (NSW) Pty Ltd All Rights Reserved 2005.
Copyright in the whole and every part of this drawing belongs to Cardno (NSW) Pty Ltd and may not be used, sold, transferred, copied or reproduced in whole or in part in any manner or form or on any media, to any person other than by agreement with Cardno (NSW) Pty Ltd.

This document is produced by Cardno (NSW) Pty Ltd solely for the benefit of and use by the client in accordance with the terms of the retainer. Cardno (NSW) Pty Ltd does not and shall not assume any responsibility or liability whatsoever to any third party arising out of any use or reliance by third party on the content of this document.

CLIENT:

DESIGNED: BM
DRAWN: KJ
CHECKED: BM
RECOMMENDED: PROJECT MANAGER DATE
DATUM:
COORDINATE SYSTEM:
APPROVED: PROJECT DIRECTOR DATE

Cardno
Cardno (NSW) Pty Ltd
ABN: 95 001 145 035
Level 3, 910 Pacific Highway, Gordon, NSW Australia 2072
Phone (+61 2) 9496 7700 Fax (+61 2) 9499 3902
Email: sydney@cyd.cardno.com.au Web: www.cardno.com.au

RAILCORP
STANDARD BRICK ARCH CULVERT EXTENSION
OPTION 1 - HELCOR PIPE

DRAWING STATUS:
DRAWING NUMBER: 848636-002
REV: 1

A1 ON ORIGINAL

Standard brick arch culvert extensions

AC-004

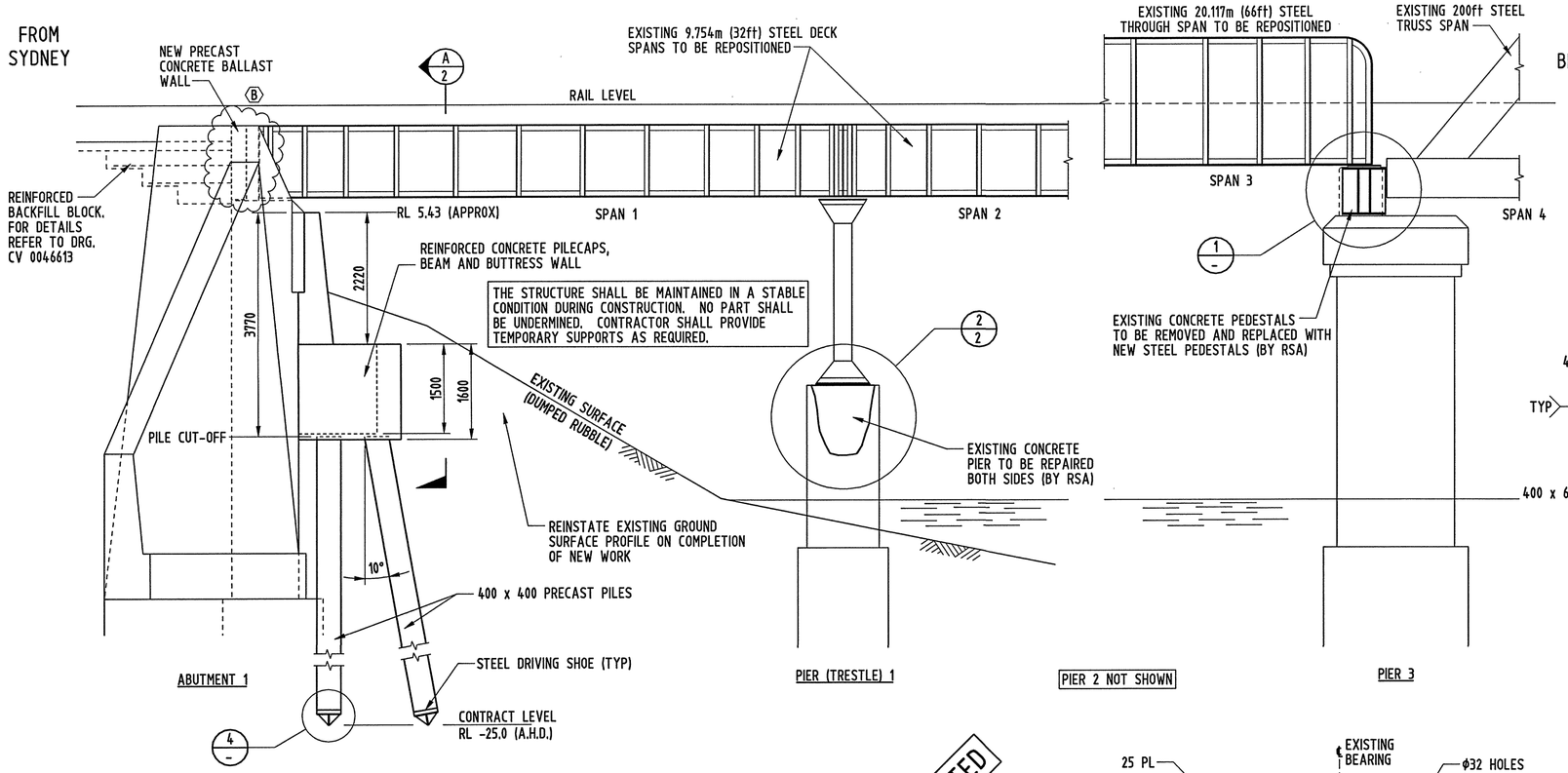

ELEVATION
SCALE 1:100

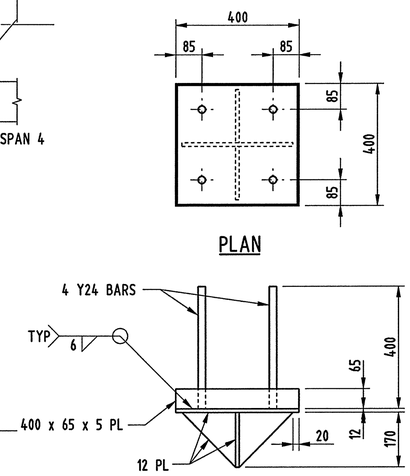

PLAN

ELEVATION
STEEL DRIVING SHOE

DETAIL 4
SCALE 1:10

WORK AS EXECUTED

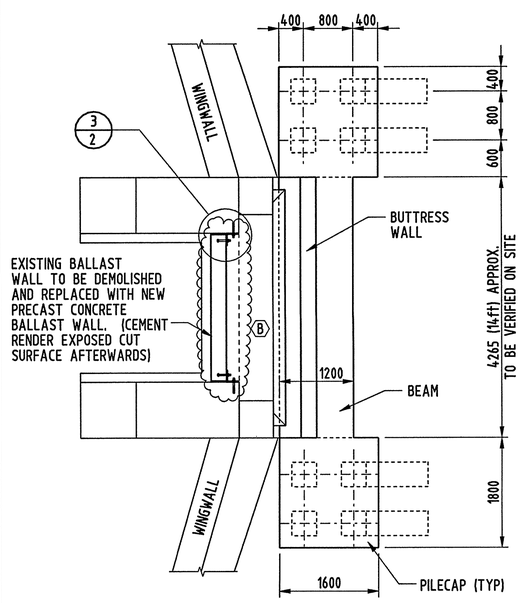

PLAN
SCALE 1:100

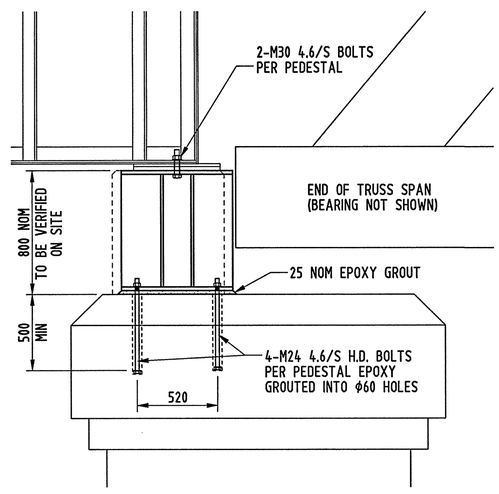

DETAIL 1
SCALE 1:20

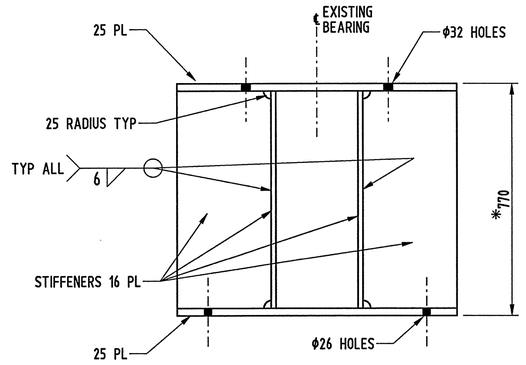

ELEVATION
SCALE 1:10

*VERIFY DIMENSIONS ON SITE PRIOR TO DRILLING HOLES

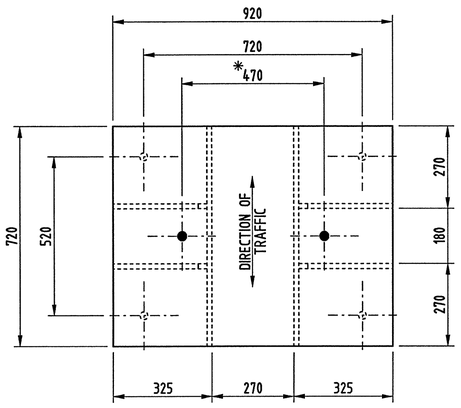

PLAN - STEEL PEDESTAL - (2 REQ'D)
SCALE 1:10

NOTES

GENERAL
1. DIMENSIONS SHALL NOT BE SCALED FROM THIS DRAWING.
2. ALL DIMENSIONS ARE IN MILLIMETRES UNO.

DESIGN
1. DESIGN CODE : AUSTRALIAN BRIDGE DESIGN CODE.
2. DESIGN LOADING : 300-A-12 + 0.6 DYNAMIC ALLOWANCE

STEELWORK
1. ALL STRUCTURAL STEELWORK SHALL COMPLY WITH AS 4100.
2. ALL STEEL PLATE SHALL COMPLY WITH AS 3678 GRADE 250.

WELDING
1. ALL WELDS SHALL COMPLY WITH AS 1554 PART 1, CATEGORY SP.
2. EXTENT OF WELD INSPECTION :
   100% VISUAL EXAMINATION,
   10% NON DESTRUCTIVE TESTING
3. ALL FILLET WELDS TO BE 6mm CONTINUOUS UNO.

GALVANIZING
1. ALL STEELWORK SHALL BE HOT DIP GALVANIZED TO AS 1650.
2. ALL BOLTS, NUTS & WASHERS SHALL BE GALVANIZED TO AS 1214.
3. PROVIDE GALVANIZED SPRING WASHERS UNDER ALL NUTS.
4. ALL VENT HOLES FOR GALVANIZING SHALL BE PUNCHED OR DRILLED.

CONCRETE
1. ALL CONCRETE WORK SHALL COMPLY WITH MR FORM 2080.
2. CONCRETE 28 DAY COMPRESSIVE STRENGTH f'c = 40 MPa.
3. EXPOSURE CLASSIFICATION = B1
4. 25mm CHAMFERS & FILLETS SHALL BE PROVIDED TO ALL EXPOSED EDGES AND CORNERS UNO.

REINFORCEMENT
1. CLEAR COVER TO REINFORCEMENT SHALL BE 45mm U.N.O.
2. COGS & HOOKS SHALL BE IN ACCORDANCE WITH AS 3600.
3. ALL PIN DIAMETERS TO BE 4 TIMES THE BAR DIAMETER (4D).
4. SPLICES IN REINFORCEMENT SHALL BE MADE ONLY IN POSITIONS SHOWN OR AS APPROVED IN WRITING BY THE SUPERINTENDENT.
5. Y DENOTES GRADE 400Y, DEFORMED BARS TO AS 1302.
6. DESIGNATION OF REINFORCEMENT BARS :

12 (S1) Y12 AT 200 (EF)
- No. OF BARS
- BAR SHAPE NOTATION
- BAR GRADE AND TYPE
- SPACING OF BARS
- LOCATION COMMENT

PILING
1. 400 x 400 REINFORCED CONCRETE DRIVEN PILES DERIVING LOAD FROM END BEARING AND SHAFT FRICTION.
2. THE DESIGN ULTIMATE CAPACITY OF EACH PILE SHOULD BE NO LESS THAN 750kN, WHILE THE LATERAL BEARING CAPACITY SHOULD BE NO LESS THAN 225kN.
2. CONTRACT LEVEL IS ONLY FOR REFERENCE. THE PILE CAPACITY SHOULD BE CONFIRMED BY A PROFESSIONAL STRUCTURAL ENGINEER.

HORIZONTAL BAR GROUTING
1. FOR GROUTING HORIZONTAL BARS INTO CONCRETE HOLES USE 'EPIREZ 8242' (WITH DUAL CARTRIDGE GUN) OR APPROVED EQUIVALENT.

EPOXY GROUT & EPOXY MORTAR
1. EPOXY MIX - 'MEGAPOXY H' (OR APPROVED EQUIVALENT).
2. EPOXY GROUT - 1 PART EPOXY MIX : 2 PARTS SAND (BY VOLUME)

NON SHRINK GROUT
1. NON SHRINK GROUT SHALL BE 'MBT SELTEX' (OR APPROVED EQUIV) WITH A MINIMUM 7 DAY COMPRESSIVE STRENGTH OF 30MPa.

EXTENT OF CONTRACTOR'S WORK
SUPPLY OF ALL LABOUR, MATERIALS AND PLANT TO CARRY OUT THE FOLLOWING;
1. INSTALL ALL PRECAST DRIVEN PILES.
2. CONSTRUCT REINFORCED CONCRETE PILECAPS, BEAM AND BATTRESS WALL.
3. DRILL AND EPOXY ALL BUTTRESS WALL DOWELS.
4. ALL EXCAVATION, BACKFILL, COMPACTION AND TEMPORARY SUPPORTS.
5. MANUFACTURE PRECAST BALLAST WALL.
6. MANUFACTURE OF STEEL PEDESTALS AND BALLAST WALL BRACKETS AND SUPPLY OF ALL FASTENINGS.
7. REINSTATEMENT OF THE EXISTING GROUND PROFILE.
8. ALL ENVIRONMENTAL PROTECTION WORK NECESSARY FOR ABOVE CONSTRUCTION WORK.
9. SUPPLY AND MAINTAIN ALL SAFETY EQUIPMENT, SAFETY PROTECTIONS, FIRST AID KIT SETS, ETC NECESSARY FOR CONTRACTOR'S WORK.
10. CLEAN AND TIDY UP SITE.

EXTENT OF RSA - NORTHERN REGION WORK
SUPPLY OF ALL LABOUR, MATERIALS AND PLANT TO CARRY OUT THE FOLLOWING;
1. REMOVE AND REINSTATE TRACK SET.
2. DEMOLITION OF EXISTING BALLAST WALL.
3. INSTALL NEW PRECAST BALLAST WALL.
4. EXCAVATE BEHIND EXISTING ABUTMENT AND CONSTRUCT NEW REINFORCED BACKFILL BLOCK.
5. REPOSITION STEEL SPANS AND REPAIR BEARINGS.
6. DEMOLITION OF EXISTING PIER 3 CONCRETE PEDESTALS.
7. INSTALLATION OF NEW STEEL PEDESTALS AT PIER 3.
8. REPAIR PIER (TRESTLE) 1 CONCRETE FOOTING.
9. ALL ENVIRONMENTAL PROTECTION WORK NECESSARY FOR ABOVE CONSTRUCTION WORK.
10. SUPPLY AND MAINTAIN ALL SAFETY EQUIPMENT, SAFETY PROTECTIONS, FIRST AID KIT SETS, ETC NECESSARY FOR RSA'S WORK.
11. CLEAN AND TIDY UP SITE.

REFERENCE
REINFORCED CONCRETE DETAILS ..... CV 0046322
EXISTING BRIDGE DETAILS ..... PH 1721

AMD	REFERENCE	DESCRIPTION	VERIFIED SIGN / DATE	APPROVED SIGN / DATE
B	A2, F2	WORK AS EXECUTED BALLAST WALL INSTALLATION CHANGED	15/4/02	15/4/2

RAIL SERVICES AUSTRALIA
RSA CONSULTING CIVIL DESIGN
* SIGNED ON ORIGINAL

DRAWN * RDP
DESIGNED * SS
DRG CHECK * SS
DESIGN CHECK * PP
PROJECT LEADER * P PRASAD
* H. Chong 5/11/98
MANAGER, CIVIL DESIGN DATE

MACKSVILLE
NORTH COAST LINE – 553.490km
NAMBUCCA RIVER UNDERBRIDGE
ABUTMENT 1 STABILISATION AND PIER REPAIRS
GENERAL ARRANGEMENT AND STEELWORK ©

PROJECT No.	SHEET 1 OF 2	A1
T.M.C. ID.	No. CV 0046321	B

DF 801x554

ECallagh 21-JAN-2002 08:07 u:\COMMON\dgn\1998\Macksville\mksubsg.dgn

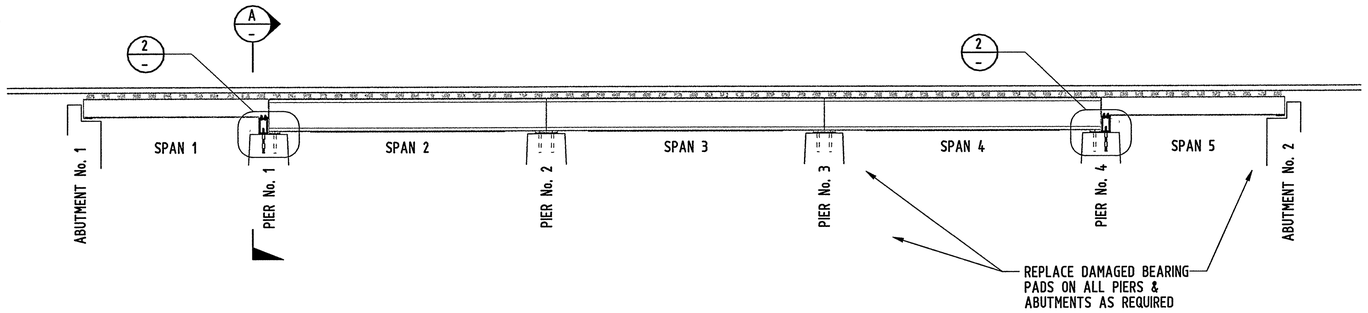

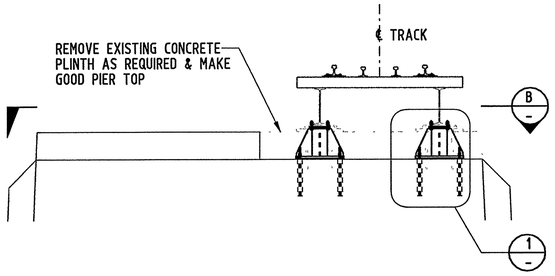

SECTION A
SCALE 1:50

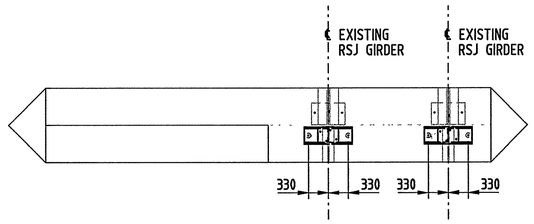

SECTION B
SCALE 1:10

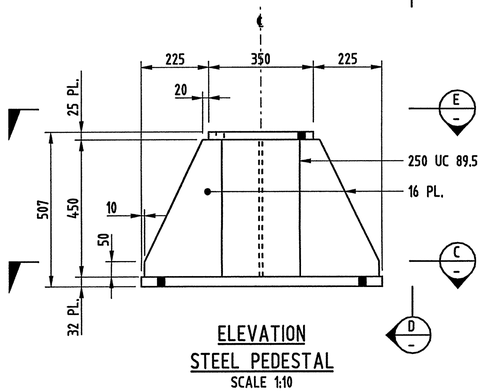

ELEVATION
STEEL PEDESTAL
SCALE 1:10

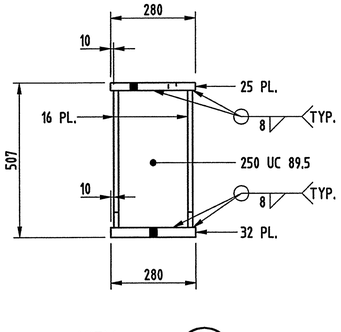

VIEW D
SCALE 1:10

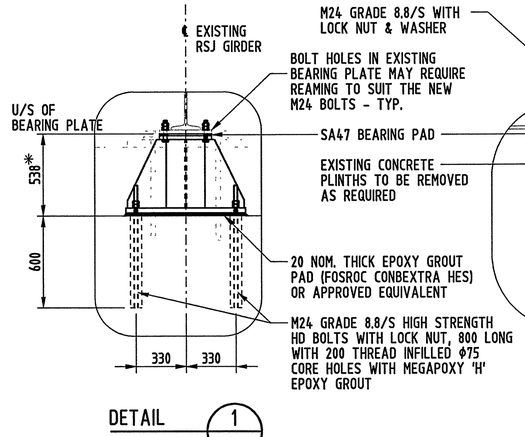

DETAIL 1
SCALE 1:20

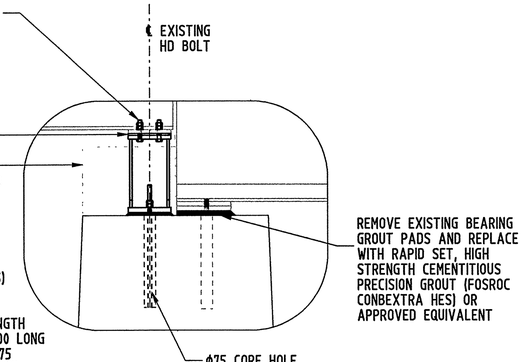

DETAIL 2
SCALE 1:20

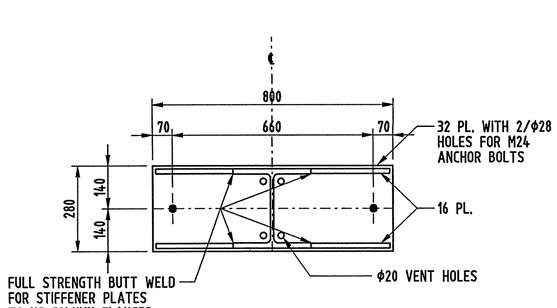

SECTION C
SCALE 1:10

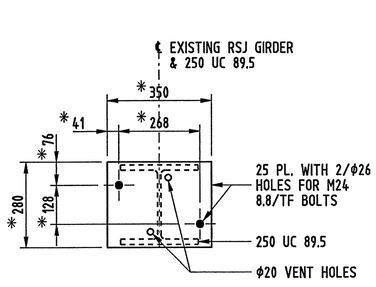

VIEW E
SCALE 1:10

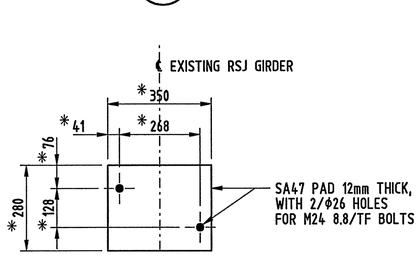

PLAN - SA47
BEARING PAD
SCALE 1:10

REPAIR WORK

1. REMOVE PARTS OF CONCRETE PLINTHS AND REPLACE WITH THE STEEL PEDESTALS FOR PIERS 1 & 4.
2. REPLACE EXISTING DAMAGED BEARING PADS ELSEWHERE WITH RAPID SET, HIGH STRENGTH CEMENTITIOUS PRECISION GROUT (FOSROC CONBEXTRA HES) OR APPROVED EQUIVALENT.
3. THOROUGHLY CLEAN DEBRIS ACCUMULATED IN EXPANSION GAPS AND APPLY GREASE TO THE BEARINGS.

CONSTRUCTION SEQUENCE

DURING TRACK POSSESSION

1. REMOVE NUTS FROM EXISTING HOLDING DOWN BOLTS & UNTIGHTEN THE SET SCREWS OF BEARING TO THE BED PLATES.
2. JACK UP THE SUPERSTRUCTURE OF SPANS 1 & 2 AT PIER 1 & ABUTMENT 1 AND AT PIER 4 AND ABUTMENT 2 RESPECTIVELY.
3. REMOVE BED PLATES.
4. REMOVE PARTS OF CONCRETE PLINTH AT PIERS 1 & 4 TO THE EXTENT OF APPROXIMATELY ONE METRE AS SHOWN.
5. CORE TWO ϕ75 HOLES FOR THE INSTALLATION OF HOLDING DOWN BOLTS.
6. LOWER BASE PLATE OF STEEL PEDESTAL ONTO THE TWO HOLDING DOWN BOLTS AT THE PRE-SET LEVEL.
7. SLOWLY RELEASE THE JACK TO LOWER THE SUPERSTRUCTURE ON TO THE TOP PLATE OF THE STEEL PEDESTAL.
8. ADJUST THE STEEL PEDESTAL IF REQUIRE TO ALIGN THE BOLT HOLES OF EXISTING BEARING PLATE & TOP PLATE.
9. INSTALL M24 HOLDING DOWN BOLTS.
10. INFILLED THE CORE HOLES WITH EPOXY GROUT & MORTAR PAD.
11. TIGHTEN HD BOLTS AFTER THE SPECIFIED CURING TIME OF EPOXY GROUT & MORTAR PAD.

* DIMENSIONS TO BE CONFIRMED ON SITE PRIOR TO THE COMMENCEMENT OF STEEL FABRICATION

NOTES

GENERAL

1. DIMENSIONS SHALL NOT BE SCALED FROM THIS DRAWING.
2. STRUCTURE SHALL BE MAINTAINED IN A STABLE CONDITION DURING CONSTRUCTION. NO PART SHALL BE OVERSTRESSED. PROVIDE BRACING AS REQUIRED.

DESIGN

1. DESIGN CODE : AUSTRALIAN BRIDGE DESIGN CODE.
2. DESIGN LOADING : CLASS 81 LOCOMOTIVE + 100 TONNES WAGONS + DLA.

STEELWORK

1. ALL STRUCTURAL STEELWORK SHALL COMPLY WITH AS 4100.
2. ALL ROLLED STEEL SECTIONS SHALL COMPLY WITH AS 3679 GRADE 300PLUS.
3. ALL STEEL PLATE SHALL COMPLY WITH AS 3678 GRADE 350.

GALVANIZING

1. ALL STEELWORK SHALL BE HOT DIP GALVANIZED TO AS/NZS 4680.
2. ALL BOLTS, NUTS & WASHERS SHALL BE GALVANIZED TO AS 1214.
3. ALL VENT HOLES FOR GALVANIZING SHALL BE PUNCHED OR DRILLED

WELDING

1. ALL WELDS SHALL COMPLY WITH AS 1554 PART 1, CATEGORY SP.
2. EXTENT OF WELD INSPECTION :
   100% VISUAL EXAMINATION
   10% NON DESTRUCTIVE TESTING
3. ALL FILLET WELDS SHALL BE 6mm CONTINUOUS UNO.
4. ALL BUTT WELDS SHALL BE COMPLETE PENETRATION.
5. WELDING SYMBOLS ARE IN ACCORDANCE WITH AS 1101.3-1987.

STEEL PROTECTION - TOUCH UP AREAS

1. DAMAGED COATINGS AND SITE WELDING SHALL BE REPAIRED WITH 2 PACK EPOXY ZINC RICH PRIMER 75um DFT SUCH AS DULUX ZINCANODE 202 OR APPROVED EQUIVALENT.

BOLTING

1. ALL STRUCTURAL BOLTS SHALL BE M24 GRADE 8.8/TF TO AS 1252 UNO.
2. ALL HOLDING DOWN BOLTS SHALL BE M24 GRADE 8.8/S TO AS 1252 UNO
3. TB AND TF BOLTS SHALL BE INSTALLED USING APPROVED LOAD INDICATING WASHER OR BY TURN OF NUT METHOD IN ACCORDANCE WITH CLAUSE 15.2.5 AS 4100.
4. PROVIDE HD GALVANIZED SPRING WASHERS UNDER ALL NUTS.
5. NO CONNECTION SHALL HAVE LESS THAN 2 BOLTS.

EPOXY GROUT AND EPOXY MORTAR

1. EPOXY MIX - MEGAPOXY H OR APPROVED EQUIVALENT
   3 PARTS A : 1 PART B (BY VOLUME)
2. EPOXY GROUT - 1 PART EPOXY MIX : 2 PARTS SAND (BY VOLUME)
3. EPOXY MORTAR - 1 PART EPOXY MIX : 2 PARTS SAND : 4 PARTS LESS THAN 5mm SCREENINGS (BY VOLUME)

EXISTING DRAWINGS:

222M 78C NORTH COAST - KILLAWARRA STRENGTHENING OF RECOVERED GIRDER FROM VALE CREEK ..... DRG. No. 182-159
MAIN SOUTH 388M 74C - REPLACEMENT OF 5/26' TIMBER OPENING WITH STEEL GIRDERS ..... DRG. No. 182-161
STANDARD 20' 0" GIRDER PLATED RSJ TYPE SUPERSTRUCTURE ..... DRG. No. 96/80

AMD	REFERENCE	DESCRIPTION	VERIFIED SIGN / DATE	APPROVED SIGN / DATE

owner and maintainer of the new rail network
RAILINFRASTRUCTURE CORPORATION

RIC ENGINEERING CIVIL DESIGN

DRAWN
DESIGNED
DRG CHECKED
DESIGN VERIFIED
PROJECT LEADER
PRINCIPAL DESIGN ENGINEER, CIVIL — DATE 9.10.03

WARNING SCANNED IMAGE

TABLE TOP

MAIN SOUTH LINE 625.695km
BOWNA CREEK UNDERBRIDGE
PIER REPAIRS
GENERAL ARRANGEMENT & DETAILS ©

FILE No. A / 03/239 — SHEET 1 OF 1 — A1
T.M.C. PW 260000 — No. CV 0214592 — A

This drawing is protected by copyright. You may not reproduce any of it in any form without the written permission of the Rail Infrastructure Corporation. If you do, you may have to pay damages to the Rail Infrastructure Corporation or you may be prosecuted.

DF 801x554

S. TRAN

stran 09-OCT-2003 11:06 u:\Common\dgn\2003\ub\Table top\topubga.dgn

uaCAD plot by stran on Thursday October 09 2003 at 11:06:02 AM AUS

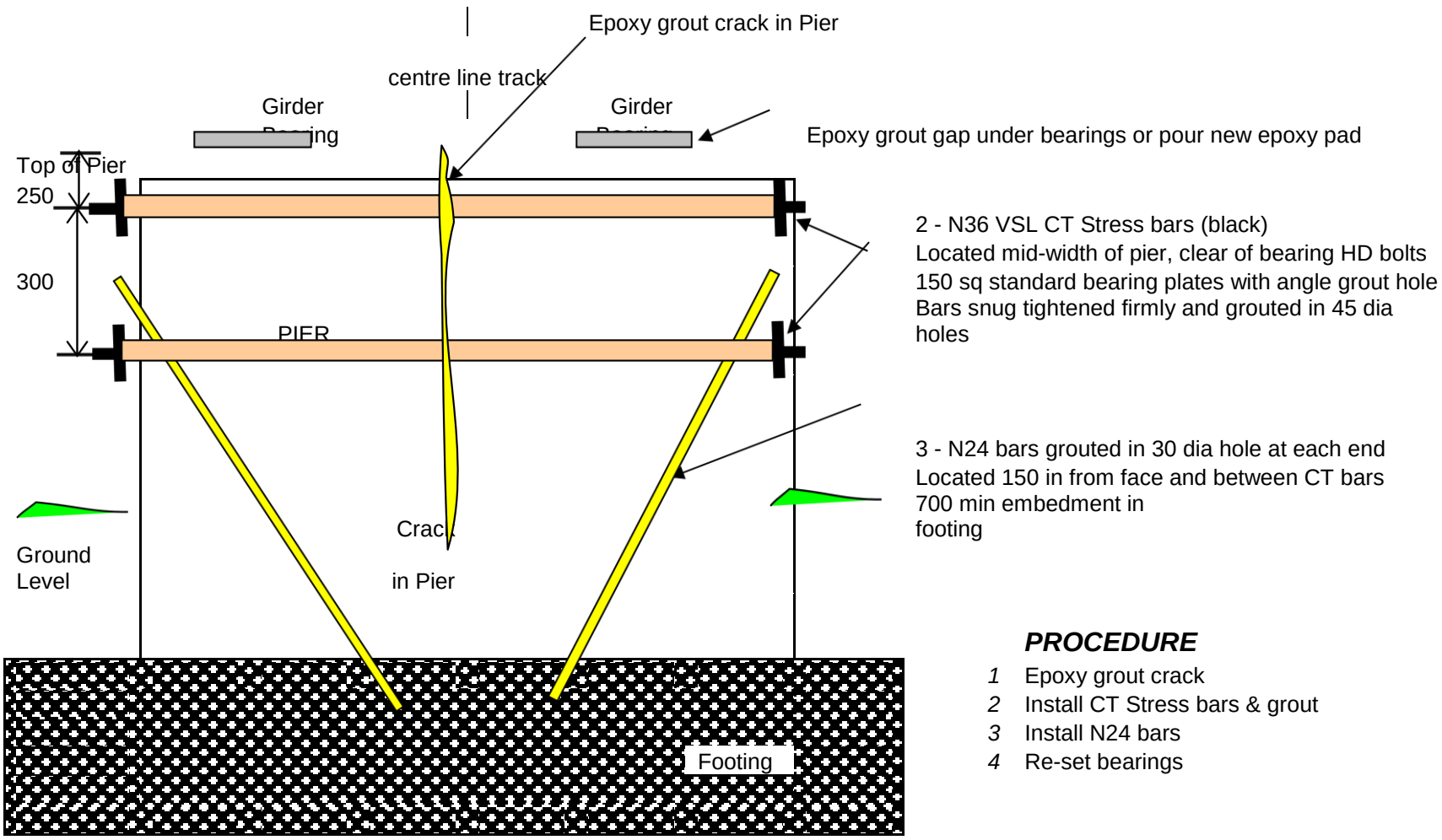

PROCEDURE

1. Epoxy grout crack
2. Install CT Stress bars & grout
3. Install N24 bars
4. Re-set bearings

Typical RSJ Span Pier Strengthening

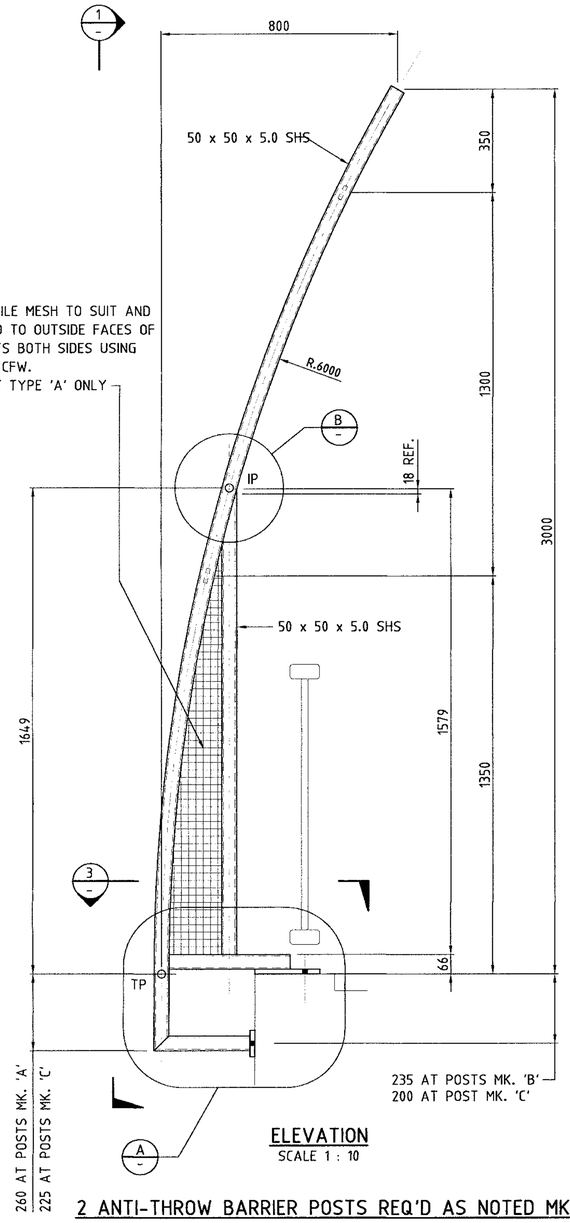

ELEVATION
SCALE 1 : 10

2 ANTI-THROW BARRIER POSTS REQ'D AS NOTED MK. 'A'
9 ANTI-THROW BARRIER POSTS REQ'D AS NOTED MK. 'B'
1 ANTI-THROW BARRIER POST REQ'D AS NOTED MK. 'C'

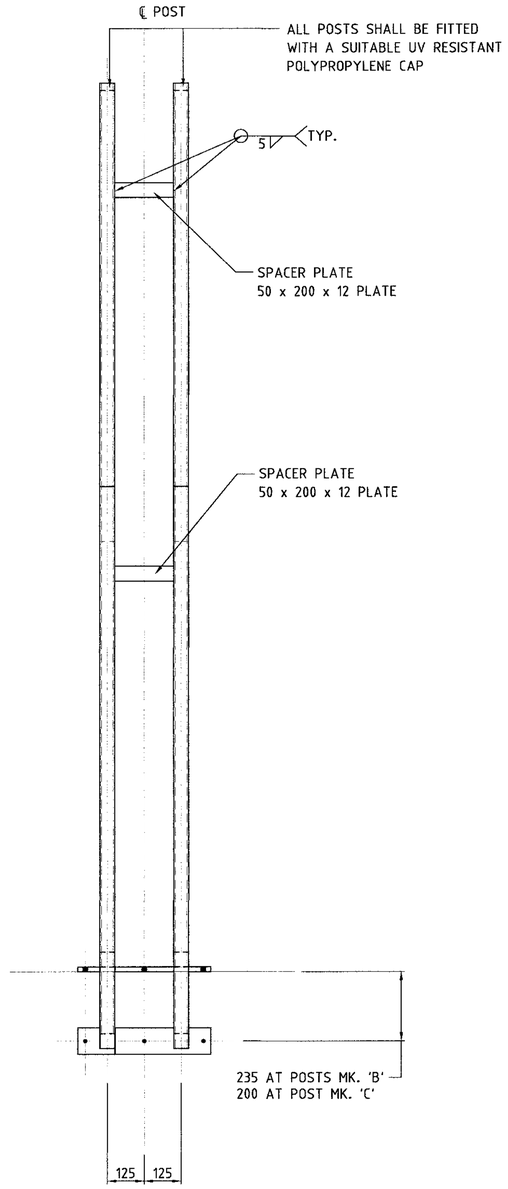

VIEW 1
SCALE 1 : 10

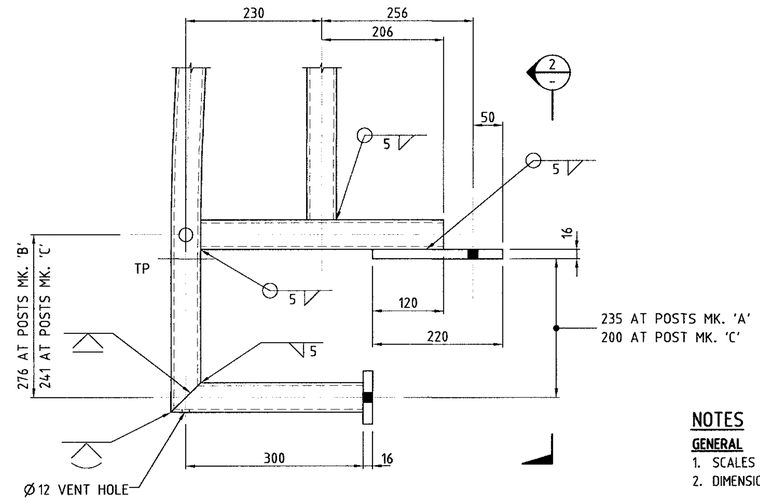

DETAIL A
SCALE 1 : 5

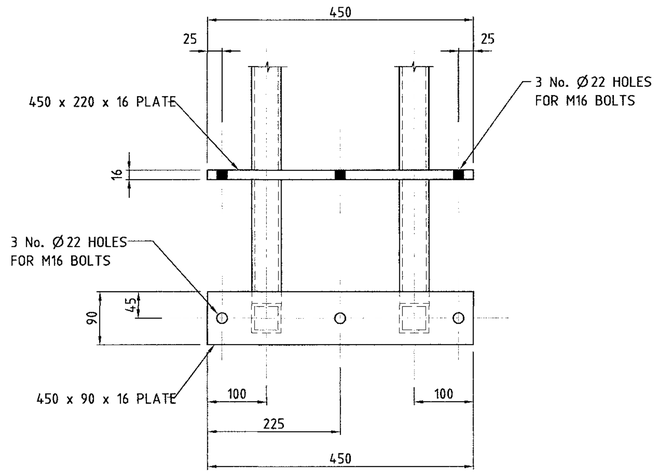

VIEW 2
SCALE 1 : 5

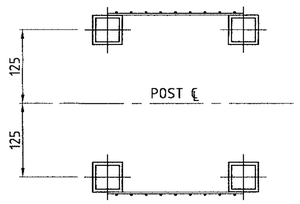

SECTION 3
SCALE 1 : 5

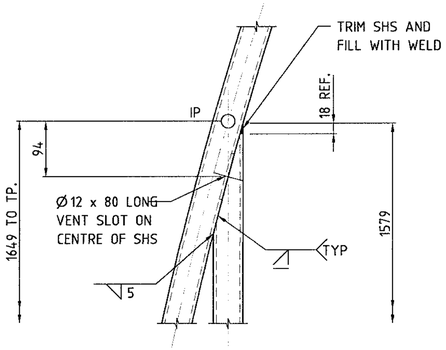

DETAIL B
SCALE 1 : 5

NOTES

GENERAL

1. SCALES AS SHOWN FOR A1 DRAWING SHEET
2. DIMENSIONS SHALL NOT BE SCALED OF THIS DRAWING

STEELWORK

1. ALL STRUCTURAL STEELWORK SHALL COMPLY WITH AS4100
2. ALL STEEL PLATE SHALL BE GRADE 350 TO AS/NZS3678.
3. SQUARE HOLLOW SECTIONS SHALL BE GRADE C350LO TO AS1163.
4. MESH PANELS SHALL BE 25 x 25 x 3.15 WELDED WIRE MESH AND SHALL CONFORM TO AS2423
5. ANCHOR RODS SHALL BE GRADE 5.8 ISO 898 T1 HOT DIPPED GALVANISED TO 40 MICRONS.
6. TIGHTENING TORQUE OF ANCHORS SHALL BE 50Nm.

WELDING

1. ALL WELDING SHALL CONFORM TO THE REQUIREMENTS OF AS/NZS1554 PART 1.
2. THE WELD CATEGORY SHALL BE SP IN ACCORDANCE WITH AS/NZS1554 PART 1. UNO.
3. WELDING SYMBOLS COMPLY WITH AS1101 PART 3.
4. ALL FILLET WELDS TO BE 5mm CONTINUOUS UNO.
5. ALL BUTT WELDS TO BE COMPLETE PENETRATION.

GALVANIZING

1. ALL COMPONENTS SHALL BE HOT DIP GALVANISED AFTER FABRICATION IN ACCORDANCE WITH AS/NZS4680
2. EDGES TO BE PROTECTIVE TREATED SHALL BE ROUNDED TO A RADIUS OF 1.5mm UNLESS STATED OTHERWISE.
3. BOLTS, NUTS AND WASHERS SHALL BE HOT DIP GALVANISED IN ACCORDANCE WITH AS1214.
4. NUTS SHALL BE TAPPED TO SUIT GALVANISED THREADS AND OILED FOR PROTECTION.
5. ALL VENT HOLES FOR GALVANIZING SHALL BE PUNCHED OR DRILLED

REFERENCES

GENERAL ARRANGEMENT CV0227781
STEELWORK DETAILS - SHEET 2 OF 2 ..... CV0227783
ELECTRICAL ISOLATION/BONDING DETAILS CV0227784

AMD	REFERENCE	DESCRIPTION	VERIFIED SIGN./DATE	APPROVED SIGN./DATE
B		NOTES AMMENDED	GS 02.05.05	RA 02.05.05
A		ISSUE FOR CONSTRUCTION	GS 22.04.05	RA 22.04.05

SKM
Sinclair Knight Merz Pty Ltd
A.C.N. 001 024 095
100 Christie Street
St Leonards
NSW 2065 Australia
Telephone (02) 9928 2100
Facsimile (02) 9928 2500

DRAWN V.L.Egerton
DESIGNED G. Sisk
DRG CHECK G. Sisk
DESIGN VERIFIED G. Hughes
APPROVED 02.05.05 DATE

RailCorp Design accepted for use by RailCorp 4.5.05 DATE

This drawing and the information contained thereon have been created solely for a particular purpose and client. This is protected by copyright. You may not reproduce any of it in any form without the written permission of Rail Corporation New South Wales. If you do, you may have to pay damages to RailCorp or you may be prosecuted.

CHESTER HILL
MAIN SOUTH LINE - 22.199km
CHESTER HILL ROAD OVERBRIDGE BARRIER SCREENS
STEELWORK DETAILS. SHEET 1 OF 2. ©

FILE No. A/03/257	STATUS: CONSTRUCTION	SHEET 2 OF 4	A1
	CV0227782		B

DF 801x554

WARNING SCANNED IMAGE

DISCLAIMER
Railcorp signatures on this document designate only that the drawings appear to be consistent with Railcorp's brief to the consultant and that the presentation is satisfactory. Responsibility for the structural adequacy, safety and dimensional accuracy remains with the Consultant

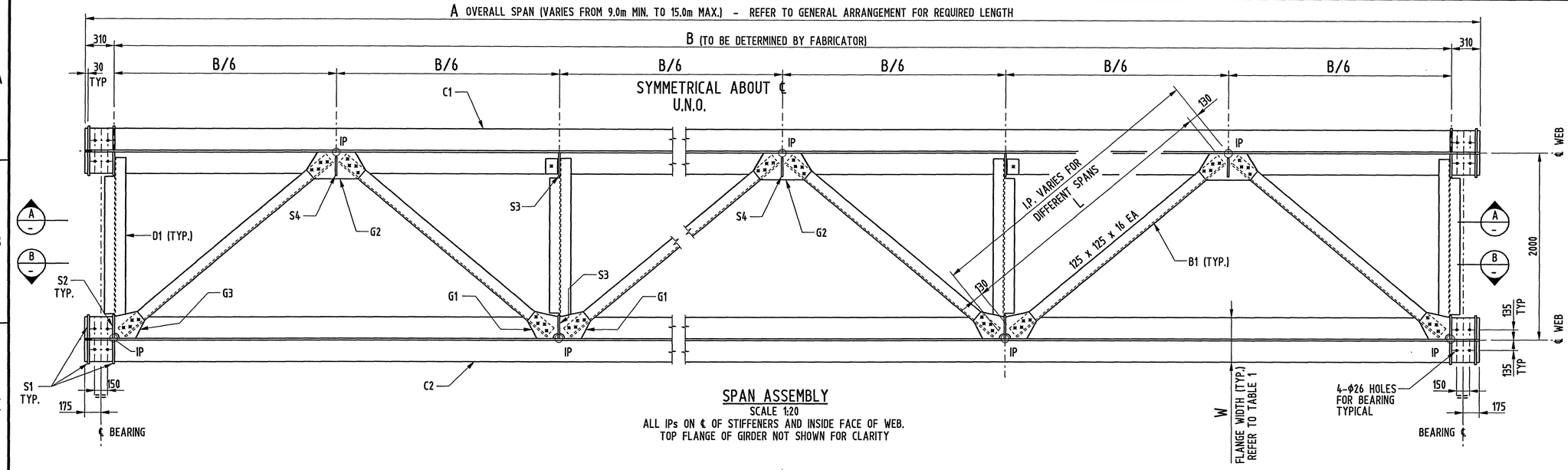

SPAN ASSEMBLY

SCALE 1:20

ALL IPs ON ℄ OF STIFFENERS AND INSIDE FACE OF WEB.
TOP FLANGE OF GIRDER NOT SHOWN FOR CLARITY

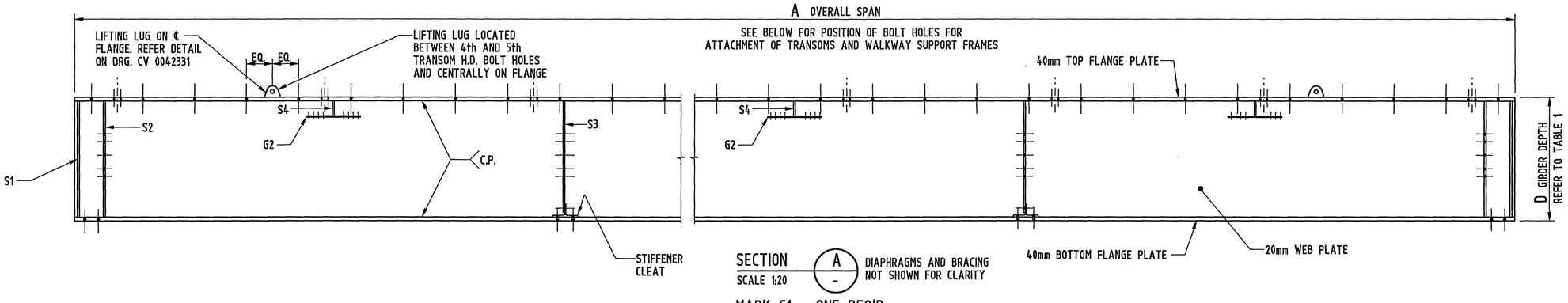

SECTION A

SCALE 1:20

DIAPHRAGMS AND BRACING NOT SHOWN FOR CLARITY

MARK C1 - ONE REQ'D

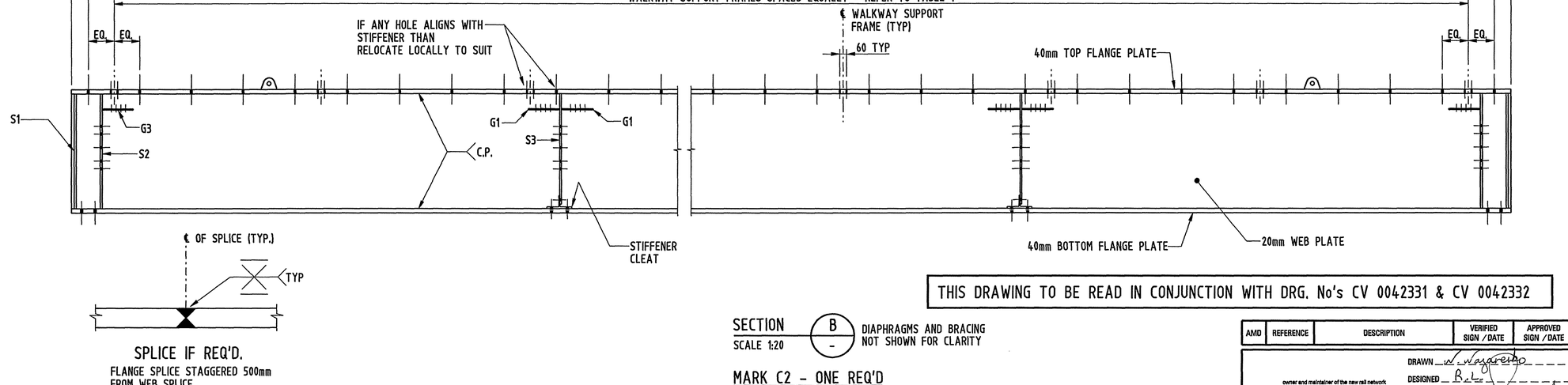

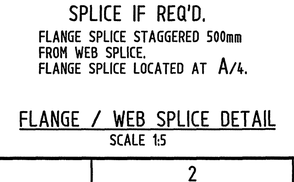

SPLICE IF REQ'D.
FLANGE SPLICE STAGGERED 500mm FROM WEB SPLICE.
FLANGE SPLICE LOCATED AT A/4.

FLANGE / WEB SPLICE DETAIL

SCALE 1:5

SECTION B

SCALE 1:20

DIAPHRAGMS AND BRACING NOT SHOWN FOR CLARITY

MARK C2 - ONE REQ'D

THIS DRAWING TO BE READ IN CONJUNCTION WITH DRG. No's CV 0042331 & CV 0042332

NOTES

GENERAL
1. THIS DRAWING IS FOR ONE COMPLETE SPAN ONLY.
2. DIMENSIONS SHALL NOT BE SCALED FROM THIS DRAWING.

DESIGN
1. AUSTRALIAN BRIDGE DESIGN CODE 1996.
2. LIVE LOADS - 300LA + APPLICABLE DYNAMIC LOAD ALLOWANCE.

MATERIALS
1. FLANGE AND WEB PLATES - GRADE 350L15 TO AS 3678.
2. ALL OTHER STEEL - GRADE 350 TO AS 3678.
3. ROLLED SECTIONS - GRADE 300 PLUS.

WELDING
1. ALL WELDS SHALL COMPLY WITH ANSI/AWS D1.1-96.
2. ALL WELDS AS SHOWN. WELD SYMBOLS ARE TO AS1011 PART 3.
3. EXTENT OF WELD INSPECTION :
   (a) ALL WELDS 100% VISUAL EXAMINATION.
   (b) ALL FUSION WELDS: 100% ULTRASONIC TESTING.
   (c) TOP AND BOTTOM FLANGE SPLICES: 100% RADIOGRAPH.
   (d) WEB SPLICES: 25% OF EACH WELD RADIOGRAPH.
4. FATIGUE LIFE ENHANCEMENT OF WELD SHALL BE CARRIED OUT IN ACCORDANCE WITH SECTION 8.4.1 OF ANSI/AWS D1.1-96 AND SPECIFICATION.
   (a) FULL LENGTH OF ALL FLANGE WELDS.
   (b) UP TO 200mm FROM AND ABOVE BOTTOM FLANGE FOR ALL WEB AND STIFFENER WELDS.

HOLES
1. ALL HOLES INDICATED THUS SHALL BE 24 DIA. TO SUIT 'HUCK' BOLTS UNLESS NOTED OTHERWISE.
2. ALL HOLES INDICATED THUS SHALL BE OF SIZE INDICATED AFTER GALVANIZING TO SUIT BOLTS SPECIFIED.

HUCK BOLTS
1. ALL STRUCTURAL BOLTS SHALL BE 22 DIA. (7/8") 'HUCK' BOLTS AND SHALL BE GRADE 8.8 IN ACCORDANCE WITH AS 1252.
2. TYPE OF 'HUCK' BOLTS AND COLLARS REQUIRED ARE :
   BOLT TYPE: C50LR-BR28
   COLLAR TYPE: LC-2R
   CONTRACTOR SHALL DETERMINE GRIP LENGTHS REQUIRED FOR INDIVIDUAL CONNECTIONS.
3. ALL 'HUCK' BOLTS SHALL BE INSTALLED IN ACCORDANCE WITH THE MANUFACTURER'S WRITTEN INSTRUCTIONS.

H.S.S. BOLTS - ALTERNATIVE FASTENING SYSTEM
1. GALVANISED HIGH STRENGTH STRUCTURAL BOLTS, NUTS, AND WASHERS SHALL COMPLY WITH AS1252 AND SHALL BE INSTALLED IN ACCORDANCE WITH AS4100.
2. ALL JOINTS ARE FRICTION GRIP TYPE (TF).
3. 8.8/TF BOLTS TO BE INSTALLED USING APPROVED LOAD INDICATING WASHER OR BY THE PART-TURN METHOD TO AS4100.

PROTECTIVE COATING

GALVANIZING
1. ALL FABRICATED STEELWORK, INCLUDING SPAN SHALL BE HOT DIP GALVANIZED TO AS/NZS 4680 U.N.O..
2. ALL BOLTS, NUTS & WASHERS (EXCEPT 'HUCK' BOLTS SHALL BE GALVANIZED TO AS 1214.
3. ALL 'HUCK' BOLTS SHALL MECHANICALLY GALVANISED ('HOLLYMETAL' OR EQUIV.) TO MINIMUM 25um THICKNESS AND COATING TO COMPLY WITH THE REQUIREMENTS OF AS 3566.
4. VENT HOLES REQ'D FOR GALVANIZING SHALL BE PUNCHED OR DRILLED.

SYSTEM 'P' - (IF NOT PRACTICAL TO GALVANISE)
1. SURFACE PREPARATION: ABRASIVE BLAST CLEAN TO CLASS 2.5.
2. PRIMER COAT: INORGANIC ZINC SILICATE PAINT GPC-C-29/8 AS2105 TYPE 4 APPLIED TO ACHIEVE A MINIMUM DRY FILM THICKNESS OF 75um.
3. FINISH COAT: TWO-PACK HIGH BUILD EPOXY MICACEOUS IRON OXIDE FINISH GPC-C-29 TO A MINIMUM DRY FILM THICKNESS OF 275um.
4. THE TOTAL DRY FILM THICKNESS OF THE SYSTEM SHALL BE 350um.
5. COLOUR SHALL BE 'BRIDGE GREY'.

TOUCH UP PAINTING
1. DAMAGED COATINGS AND SITE WELDING SHALL BE REPAIRED WITH 2 PACK EPOXY ZINC RICH PRIMER 75um DFT SUCH AS DULUX ZINCANODE 202 OR APPROVED EQUIVALENT.
2. ALL DAMAGED / UNCOATED AREA TO BE REPAIRED IN ACCORDANCE WITH AS/NZS 1999.

HANDLING AND TRANSPORT
1. THE FABRICATED STEELWORK SHALL BE BRACED AND HANDLED FOR TRANSPORT AND ERECTION IN SUCH A MANNER AS TO PREVENT DISTORTION AND TO ENSURE PROTECTION FROM DAMAGE. THE METHOD OF TRANSPORTING AND HANDLING SHALL BE SUBJECT TO THE APPROVAL OF THE SUPERINTENDENT.
2. CARE MUST BE TAKEN NOT TO DAMAGE THE POT BEARINGS. GIRDER FLANGES SHALL BE SUPPORTED ON TIMBER SO THAT NO LOAD IS APPLIED TO THE BEARINGS.
3. SPECIALLY PREPARED SLINGS, LIFTING POINTS, TIMBER DUNNAGE, EDGE PROTECTORS AND RUBBER OR OTHER COVERINGS FOR LASHINGS SHALL BE PROVIDED BY THE CONTRACTOR TO MINIMISE DAMAGE TO THE STEELWORK AND ITS PROTECTIVE

REFERENCE

STEELWORK DETAILS - SHEET 2 OF 3 ..... CV 0042331
STEELWORK DETAILS - SHEET 3 OF 3 ..... CV 0042332
STEEL WALKWAY & HANDRAIL WITHOUT REFUGE - STEELWORK DETAILS ..... CV 0042333
STEEL WALKWAY & HANDRAIL WITH REFUGE - STEELWORK DETAILS ..... CV 0041442

AMD	REFERENCE	DESCRIPTION	VERIFIED SIGN / DATE	APPROVED SIGN / DATE

owner and maintainer of the new rail network
RAILINFRASTRUCTURE CORPORATION

RIC ENGINEERING
CIVIL DESIGN

DRAWN N. Nazarenko
DESIGNED R.L.
DRG CHECKED
DESIGN VERIFIED
PROJECT LEADER
30.6.03
PRINCIPAL DESIGN ENGINEER, CIVIL — DATE

STANDARD

9.0m TO 15.0m SPANS (OVERALL LENGTH) FABRICATED STEEL GIRDER SPANS

STEELWORK DETAILS – SHEET 1 OF 3 ©

FILE No. A /0 /	SHEET 1 OF 3	A1
T.M.C. PW 260000	No. CV 0042330	A

This drawing is protected by copyright. You may not reproduce any of it in any form without the written permission of the Rail Infrastructure Corporation. If you do, you may have to pay damages to the Rail Infrastructure Corporation or you may be prosecuted.

nnazare2 30-JUN-2003 17:41 u:\Common\dgn\2003\Standards\steel girder sht1.dgn

DF 801x554

N.NAZARENKO

AD Rel for Release on Monday June 30,2003 at 05:42:40 PM AEST

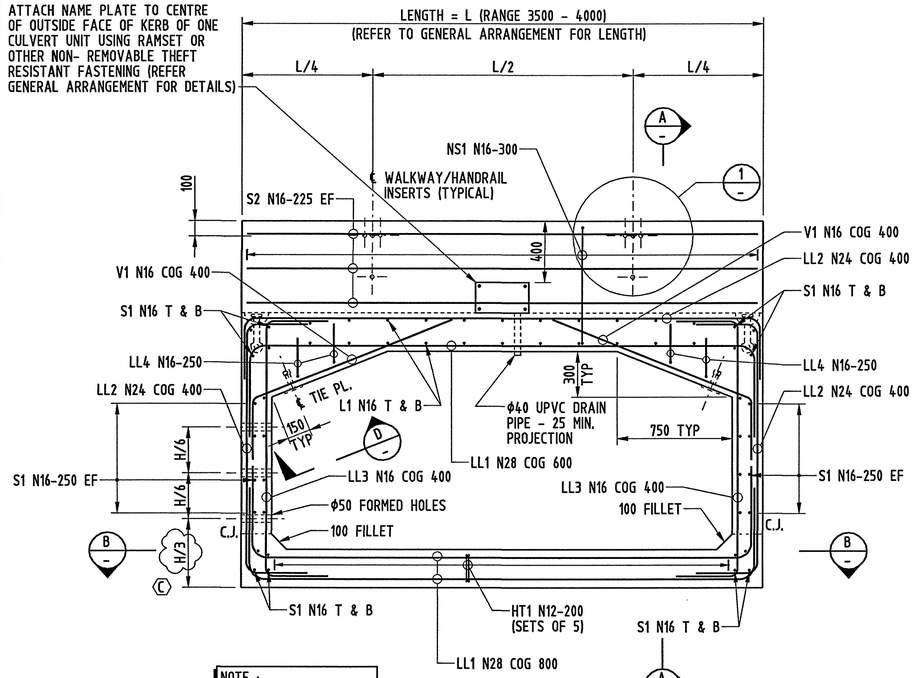

NOTE :
LIFTING ANCHOR BARS NOT SHOWN FOR CLARITY

ELEVATION
SCALE 1:20

FOR UNIT MASS REFER TO GENERAL ARRANGEMENT

NOTE :
CONSTRUCTION JOINTS (C.J.) ARE OPTIONAL AND IF REQUIRED SHALL BE LOCATED IN WALLS AND KERB AT LOCATIONS SHOWN

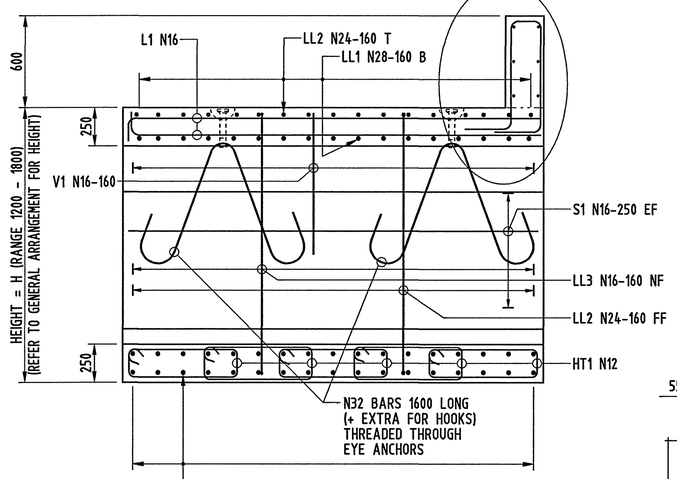

SECTION A
SCALE 1:20

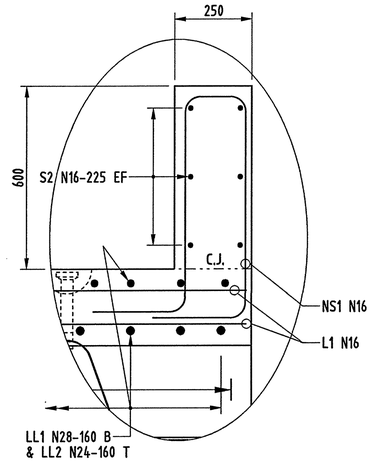

DETAIL 2
SCALE 1:10

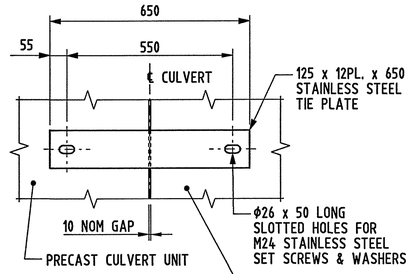

VIEW D
SCALE 1:10

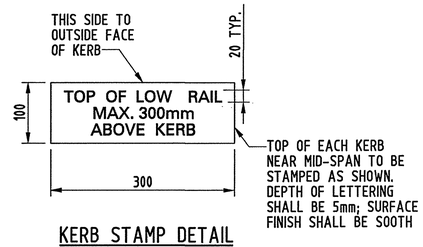

KERB STAMP DETAIL
SCALE 1:5

NOTES

GENERAL
1. DIMENSIONS SHALL NOT BE SCALED FROM THIS DRAWING.

DESIGN
1. CODE : AUSTRALIAN BRIDGE DESIGN CODE 1996 AND AS 1597.2 1996.
2. LOADING: 350LA + APPLICABLE DYNAMIC LOAD ALLOWANCE.
3. BALLAST DEPTH : 300 MIN. & 600 MAX.

PRECAST CONCRETE
1. ALL CONCRETE WORK SHALL COMPLY WITH RTA QA SPECS B80 JUNE 2000 AND B115 JULY 1997.
2. CONCRETE 28 DAY COMPRESSIVE STRENGTH f'c = 50 MPa.
3. EXPOSURE CLASSIFICATION = B1.
4. 25mm CHAMFERS & FILLETS SHALL BE PROVIDED TO ALL EXPOSED EDGES AND CORNERS UNO.

REINFORCEMENT
1. ALL REINFORCEMENT BARS SHALL BE IN ACCORDANCE WITH AS/NZS 4671 WHERE FOR ALL BARS
   - N DENOTES GRADE 500N DEFORMED RIBBED BAR
2. DESIGNATION OF REINFORCING BARS : S1 N24-200 EF
   BAR SHAPE NOTATION
   DUCTILITY CLASS AND DIA.
   SPACING OF BARS
   LOCATION COMMENT
3. THE FOLLOWING ABBREVIATIONS APPLY TO THE LOCATION OF REINFORCEMENT :
   EW - EACH WAY T - TOP
   EF - EACH FACE B - BOTTOM
   NF - NEAR FACE CP - CENTRALLY PLACED
   FF - FAR FACE
4. CLEAR COVER TO REINFORCEMENT SHALL BE 35mm.
5. COGS, HOOKS, SPLICES AND PIN DIAMETERS SHALL BE IN ACCORDANCE WITH AUSTRALIAN BRIDGE DESIGN CODE 1996 UNO.
6. SPLICES IN REINFORCEMENT SHALL BE MADE ONLY IN POSITIONS SHOWN OR AS APPROVED IN WRITING BY THE SUPERINTENDENT.
7. BAR SHAPES ARE IN ACCORDANCE WITH AS 1100.501-1985.

HANDLING
1. ALL ANCHORS SHALL BE INSTALLED IN ACCORDANCE WITH THE MANUFACTURER'S ("REIDS") WRITTEN INSTRUCTIONS.
2. MAXIMUM SLING ANGLE FOR LIFTING ROPES IS 90°.
3. FABRICATOR TO ENSURE ANCHOR CAPACITIES ARE NOT EXCEEDED DURING DEMOULDING/STRIPPING.

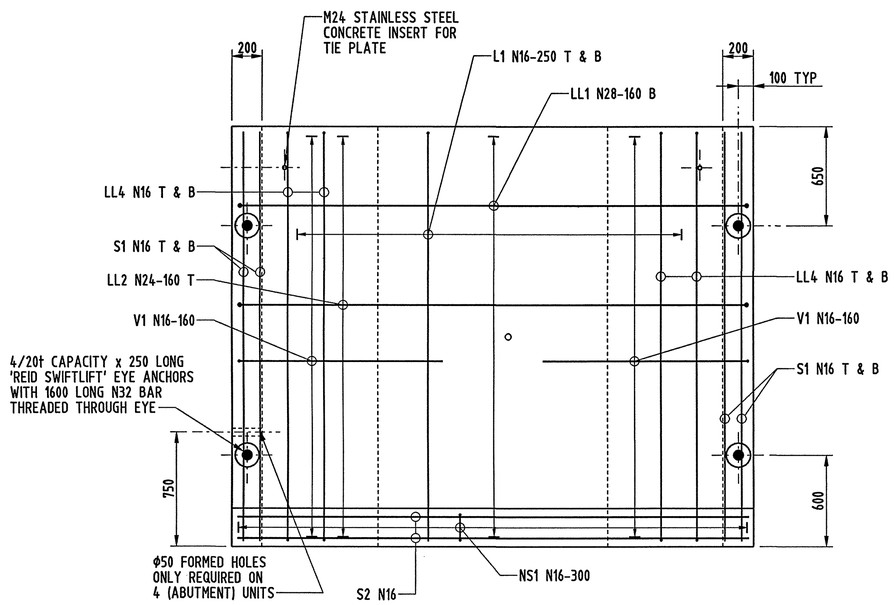

PLAN
SCALE 1:20

NOTE :
CULVERT LEG REINFORCEMENT NOT SHOWN FOR CLARITY

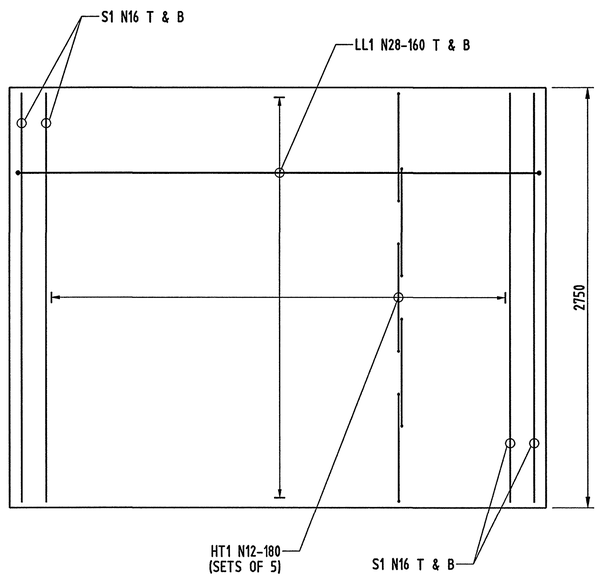

SECTION B
SCALE 1:20

NOTE :
CULVERT LEG REINFORCEMENT NOT SHOWN FOR CLARITY

NOTE :
PROVISION IS FOR WALKWAY AND/OR HANDRAIL ON EITHER SIDE OF CULVERT

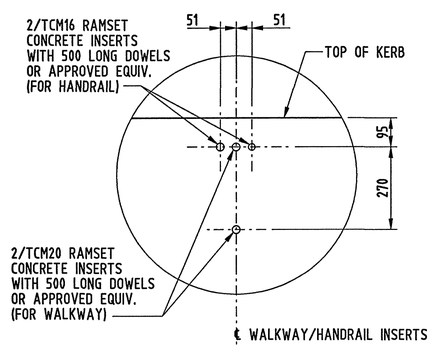

NOTE:
PRESS FIT PLASTIC PLUGS REQUIRED FOR EACH INSERT. PLUGS TO BE REMOVED FOR WALKWAY/HANDRAIL ERECTION AND TO REMAIN IN UNUSED INSERTS.

DETAIL 1
SCALE 1:10

REFERENCE

STANDARD PRECAST WINGWALL UNIT TYPE A .....DRG No. CV 0078337 (WITH BOLTED CONNECTION TO WINGWALLS)
STANDARD PRECAST WINGWALL UNIT TYPE C .....DRG No. CV 0041439 (WITHOUT BOLTED CONNECTION TO WINGWALLS)

AMD	REFERENCE	DESCRIPTION	VERIFIED SIGN / DATE	APPROVED SIGN / DATE
C	D1, F11-F12	H/4 CHANGED TO H/3, ADDITIONAL DRAWING REFERENCE		12/3/04
B	A1, B3, C1, G1, F8, C11	NAME PLATE LOCATION ALTERED FORMED HOLES ADDED DIMENSION ADDED, NOTE ADDED	P.P. 21/10/03	P.P. 21/10/03

owner and maintainer of the new rail network
RAILINFRASTRUCTURE CORPORATION

RIC ENGINEERING
CIVIL DESIGN
* SIGNED ON ORIGINAL

DRAWN * C CALLAGHAN
DESIGNED * A NG
DRG CHECKED * N SHARP
DESIGN VERIFIED * P PRASAD
GROUP LEADER * P PRASAD
*K. Chong 30/06/03
PRINCIPAL DESIGN ENGINEER, CIVIL — DATE

WARNING SCANNED IMAGE

STANDARD

PRECAST SINGLE CELL BOX CULVERT UNIT 1200 TO 1800 OVERALL CELL HEIGHT

PRECAST REINFORCED CONCRETE DETAILS ©

FILE No. A / 03 / 083	SHEET 1 OF 1	A1
T.M.C. PW 260000	No. CV 0041438	C

This drawing is protected by copyright. You may not reproduce any of it in any form without the written permission of the Rail Infrastructure Corporation. If you do, you may have to pay damages to the Rail Infrastructure Corporation or you may be prosecuted.

C CALLAGHAN

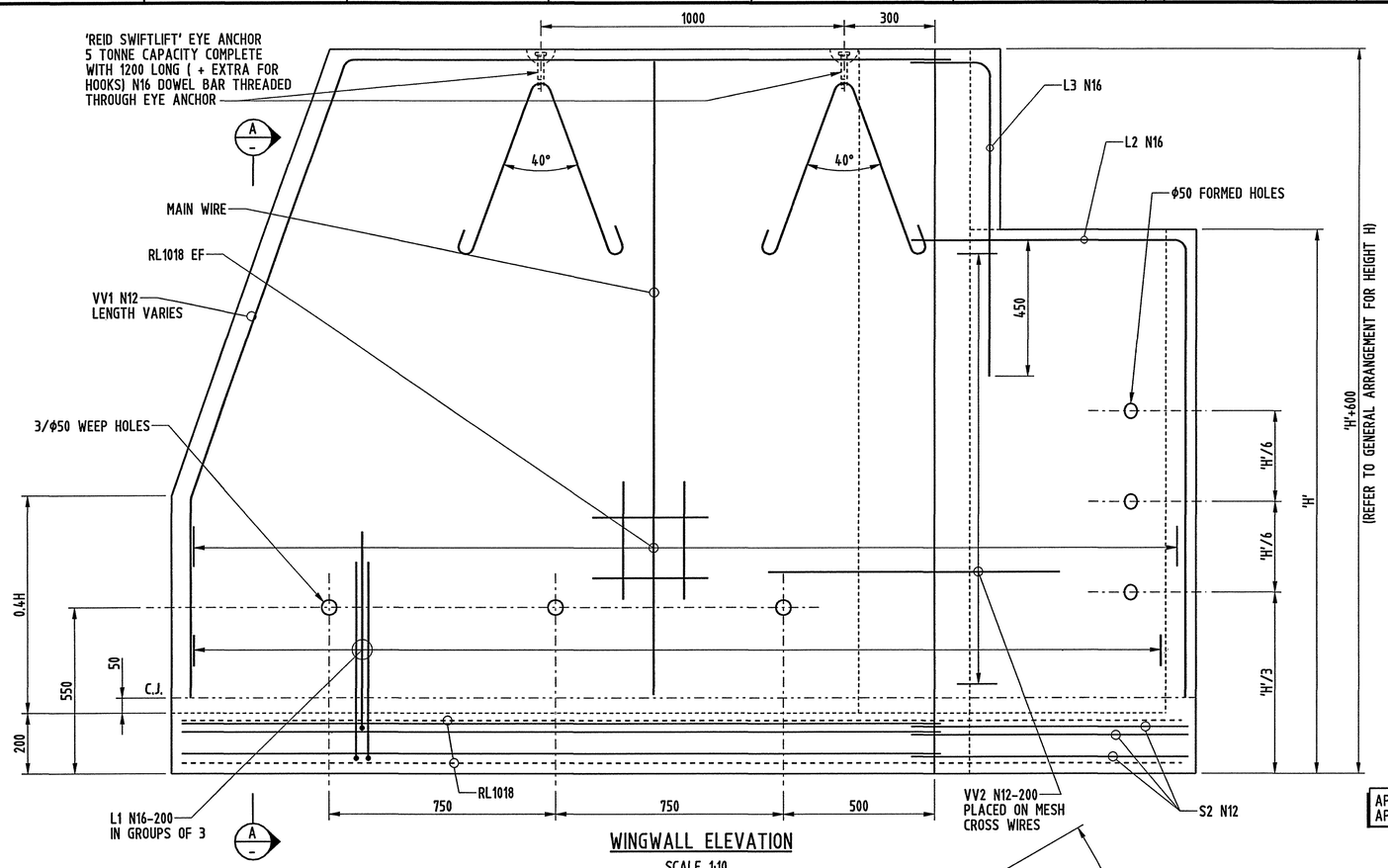

WINGWALL ELEVATION

SCALE 1:10

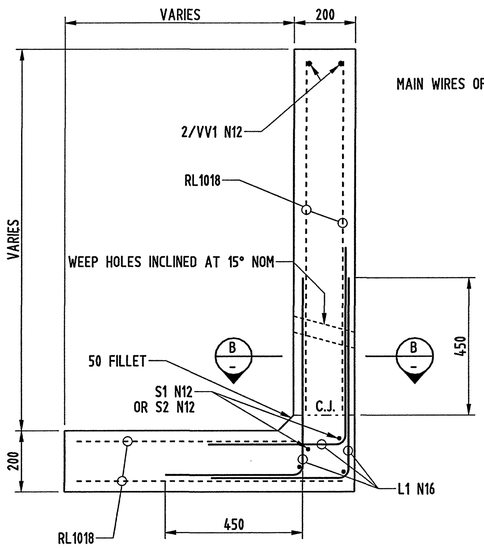

SECTION A

SCALE 1:10

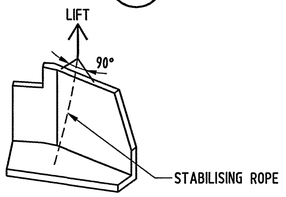

APPROX. MIN. MASS = 5t
APPROX. MAX. MASS = 6t

LIFTING DIAGRAM

NOT TO SCALE

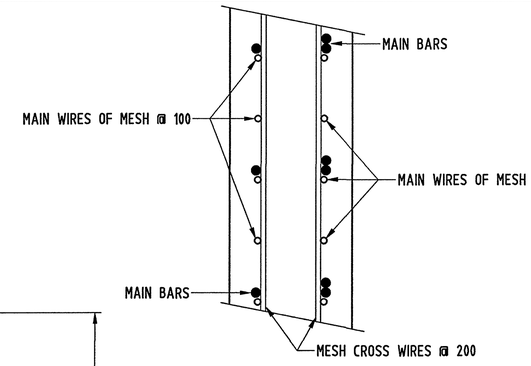

SECTION B

SCALE 1:5

NOTES

GENERAL

1. DIMENSIONS SHALL NOT BE SCALED FROM THIS DRAWING.

DESIGN

1. CODE : AUSTRALIAN BRIDGE DESIGN CODE 1996.
2. LOADING: 350LA + APPLICABLE DYNAMIC LOAD ALLOWANCE.

PRECAST CONCRETE

1. ALL CONCRETE WORK SHALL COMPLY WITH RTA QA SPECS B80 JUNE 2000 AND B115 JULY 1997.
2. CONCRETE 28 DAY COMPRESSIVE STRENGTH f'c = 50 MPa.
3. EXPOSURE CLASSIFICATION = B1.
4. 25mm CHAMFERS & FILLETS SHALL BE PROVIDED TO ALL EXPOSED EDGES AND CORNERS UNO.

REINFORCEMENT

1. ALL REINFORCEMENT BARS SHALL BE IN ACCORDANCE WITH AS/NZS 4671 WHERE FOR ALL BARS
   - N DENOTES GRADE 500N DEFORMED RIBBED BAR
   - RL DENOTES GRADE 500L RECTANGULAR RIBBED WIRE MESH
2. DESIGNATION OF REINFORCING BARS : S1 N24-200 EF
   - BAR SHAPE NOTATION
   - DUCTILITY CLASS AND DIA.
   - SPACING OF BARS
   - LOCATION COMMENT
3. THE FOLLOWING ABBREVIATIONS APPLY TO THE LOCATION OF REINFORCEMENT :
   - EW - EACH WAY
   - EF - EACH FACE
   - NF - NEAR FACE
   - FF - FAR FACE
   - T - TOP
   - B - BOTTOM
   - CP - CENTRALLY PLACED
4. CLEAR COVER TO REINFORCEMENT SHALL BE 35mm.
5. COGS, HOOKS, SPLICES AND PIN DIAMETERS SHALL BE IN ACCORDANCE WITH AUSTRALIAN BRIDGE DESIGN CODE 1996 UNO.
6. SPLICES IN REINFORCEMENT SHALL BE MADE ONLY IN POSITIONS SHOWN OR AS APPROVED IN WRITING BY THE SUPERINTENDENT.
7. BAR SHAPES ARE IN ACCORDANCE WITH AS 1100.501-1985.

HANDLING

1. ALL ANCHORS SHALL BE INSTALLED IN ACCORDANCE WITH THE MANUFACTURER'S ("REIDS") WRITTEN INSTRUCTIONS.
2. FABRICATOR TO ENSURE ANCHOR CAPACITIES ARE NOT EXCEEDED DURING DEMOULDING/STRIPPING.
3. MAXIMUM SLING ANGLE FOR LIFTING ROPES IS 90°.

REFERENCE

STANDARD PRECAST SINGLE CELL
BOX CULVERT UNIT 1200 TO 1800 HIGH.....DRG No. CV 0041438

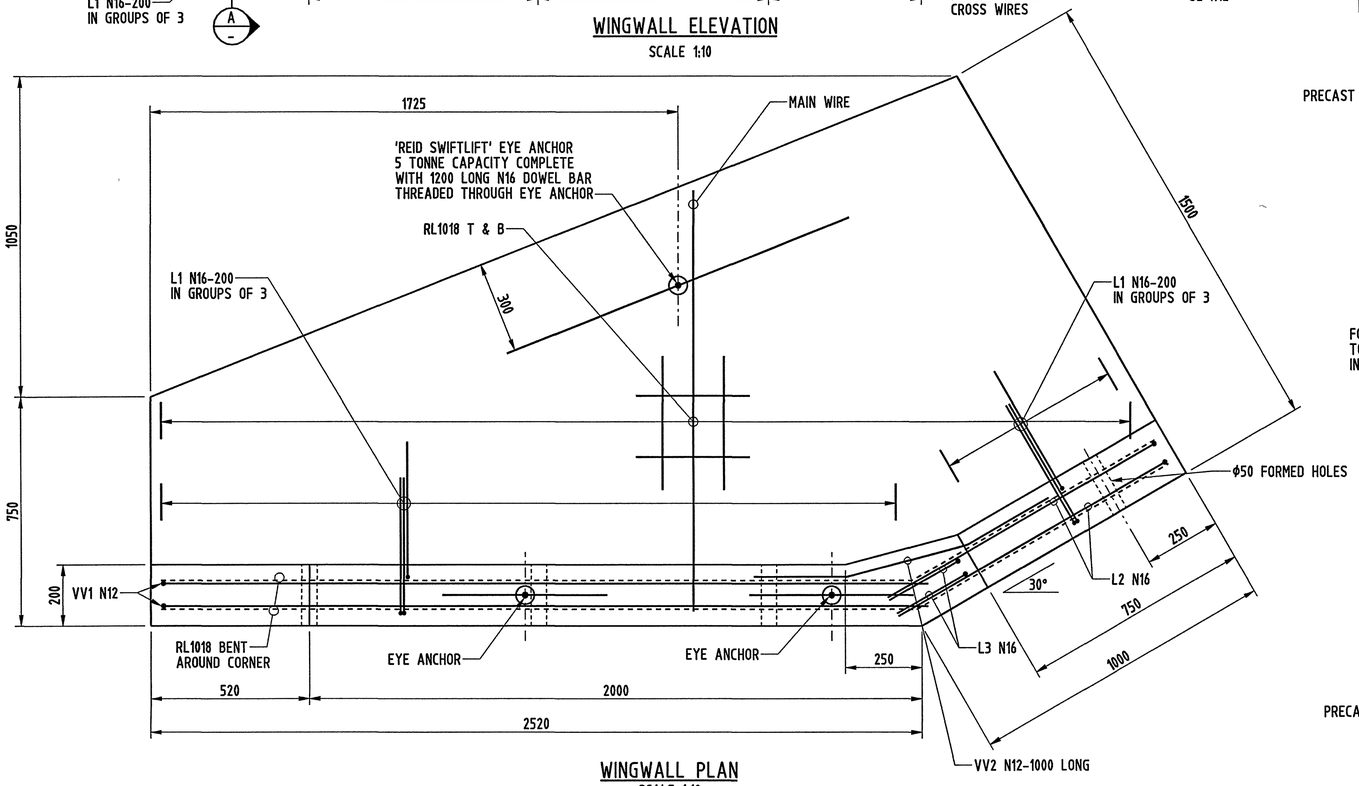

WINGWALL PLAN

SCALE 1:10

2 REQUIRED AS DRAWN
2 REQUIRED OPPOSITE HAND

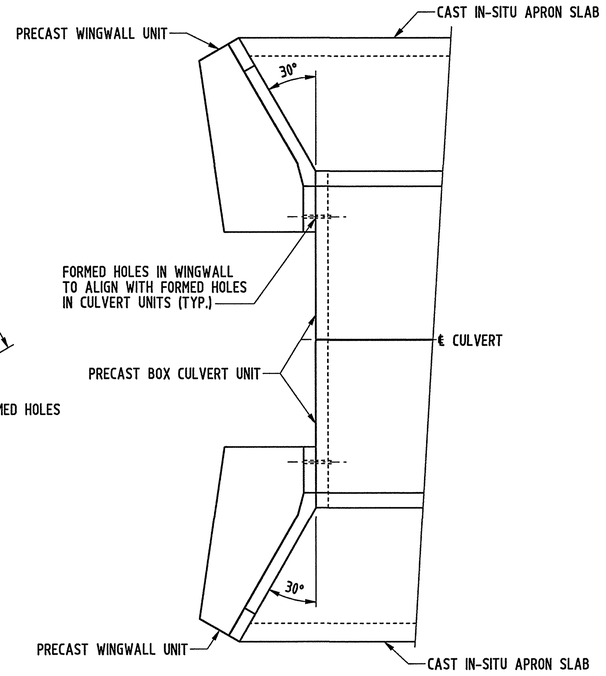

WINGWALL PLACEMENT

SCALE 1:50

AMD	REFERENCE	DESCRIPTION	VERIFIED SIGN / DATE	APPROVED SIGN / DATE

owner and maintainer of the new rail network
RAILINFRASTRUCTURE CORPORATION

RIC ENGINEERING
CIVIL DESIGN

DRAWN
DESIGNED
DRG CHECKED
DESIGN VERIFIED
GROUP LEADER
22-10-02
PRINCIPAL DESIGN ENGINEER, CIVIL — DATE

WARNING SCANNED IMAGE

STANDARD
PRECAST WINGWALL UNIT TYPE A
TO SUIT 1200 TO 1800 HIGH BOX CULVERT UNIT

PRECAST REINFORCED CONCRETE DETAILS ©

FILE No. A / 03 / 083	SHEET 1 OF 1	A1
T.M.C. PW 260000	No. CV 0078337	A

This drawing is protected by copyright. You may not reproduce any of it in any form without the written permission of the Rail Infrastructure Corporation. If you do, you may have to pay damages to the Rail Infrastructure Corporation or you may be prosecuted.

ccallagh 22-OCT-2003 11:11 n:\Groups\Civ des\Online1\std drgs\culverts\stdww1218.dgn

DF 801x554

C CALLAGHAN

AC-017

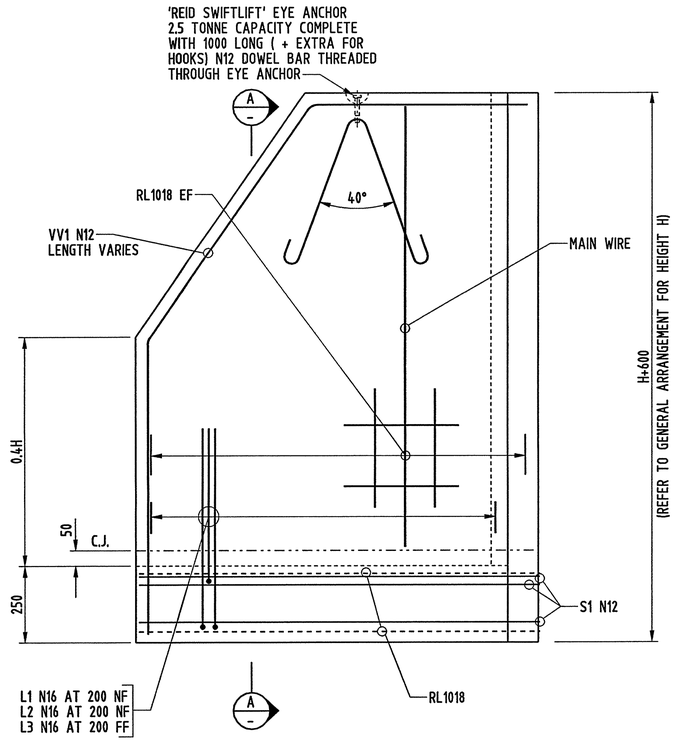

WINGWALL ELEVATION

SCALE 1:10

FOR UNIT MASS REFER TO GENERAL ARRANGEMENT

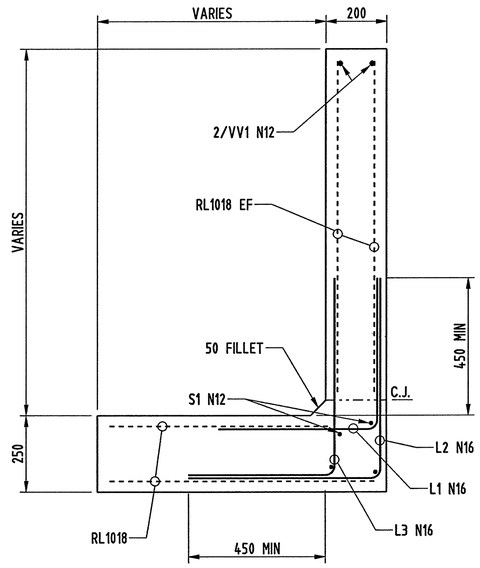

SECTION A

SCALE 1:10

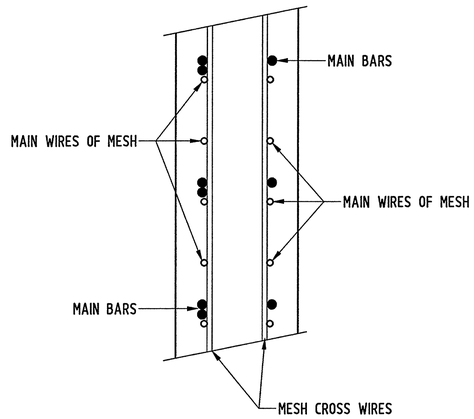

TYPICAL MESH LAYOUT

SCALE 1:5

NOTES

GENERAL

1. DIMENSIONS SHALL NOT BE SCALED FROM THIS DRAWING.

DESIGN

1. CODE : AUSTRALIAN BRIDGE DESIGN CODE 1996.
2. LOADING: 350LA + APPLICABLE DYNAMIC LOAD ALLOWANCE.

PRECAST CONCRETE

1. ALL CONCRETE WORK SHALL COMPLY WITH RTA QA SPECS B80 JUNE 2000 AND B115 JULY 1997.
2. CONCRETE 28 DAY COMPRESSIVE STRENGTH f'c = 50 MPa.
3. EXPOSURE CLASSIFICATION = B1.
4. 25mm CHAMFERS & FILLETS SHALL BE PROVIDED TO ALL EXPOSED EDGES AND CORNERS UNO.

REINFORCEMENT

1. ALL REINFORCEMENT BARS SHALL BE IN ACCORDANCE WITH AS/NZS 4671 WHERE FOR ALL BARS
   - N DENOTES GRADE 500N DEFORMED RIBBED BAR
   - RL DENOTES GRADE 500L RECTANGULAR RIBBED WIRE MESH
2. DESIGNATION OF REINFORCING BARS : S1 N24-200 EF
   - BAR SHAPE NOTATION
   - DUCTILITY CLASS AND DIA.
   - SPACING OF BARS
   - LOCATION COMMENT
3. THE FOLLOWING ABBREVIATIONS APPLY TO THE LOCATION OF REINFORCEMENT :
   - EW - EACH WAY
   - EF - EACH FACE
   - NF - NEAR FACE
   - FF - FAR FACE
   - T - TOP
   - B - BOTTOM
   - CP - CENTRALLY PLACED
4. CLEAR COVER TO REINFORCEMENT SHALL BE 35mm.
5. COGS, HOOKS, SPLICES AND PIN DIAMETERS SHALL BE IN ACCORDANCE WITH AUSTRALIAN BRIDGE DESIGN CODE 1996 UNO.
6. SPLICES IN REINFORCEMENT SHALL BE MADE ONLY IN POSITIONS SHOWN OR AS APPROVED IN WRITING BY THE SUPERINTENDENT.
7. BAR SHAPES ARE IN ACCORDANCE WITH AS 1100.501-1985.

HANDLING

1. ALL ANCHORS SHALL BE INSTALLED IN ACCORDANCE WITH THE MANUFACTURER'S ("REIDS") WRITTEN INSTRUCTIONS.
2. MAXIMUM SLING ANGLE FOR LIFTING ROPES IS 90°.
3. FABRICATOR TO ENSURE ANCHOR CAPACITIES ARE NOT EXCEEDED DURING DEMOULDING/STRIPPING.

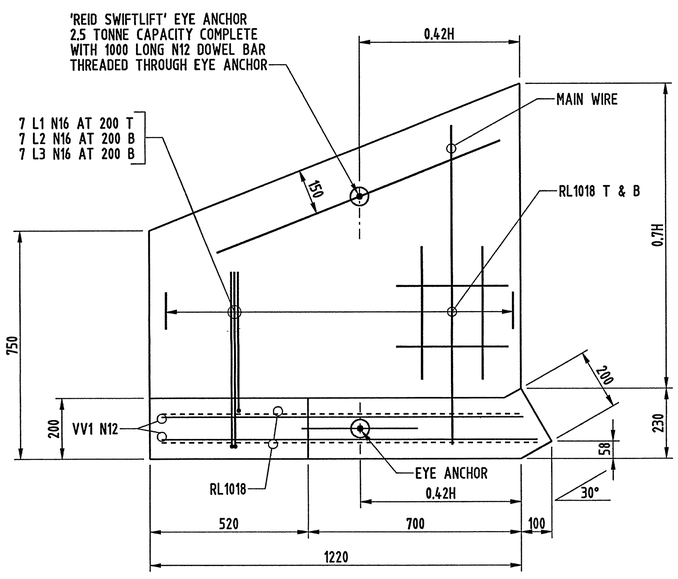

WINGWALL PLAN

SCALE 1:10

2 REQUIRED AS DRAWN

2 REQUIRED OPPOSITE HAND

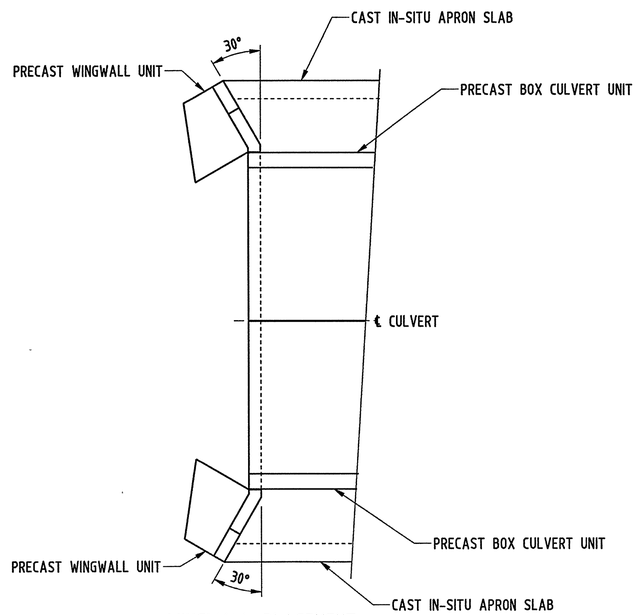

WINGWALL PLACEMENT

SCALE 1:50

REFERENCE

STANDARD PRECAST SINGLE CELL
BOX CULVERT UNIT 1200 TO 1800 HIGH.....DRG No. CV 0041438

AMD	REFERENCE	DESCRIPTION	VERIFIED SIGN / DATE	APPROVED SIGN / DATE
B	H1	TITLE BLOCK CHANGED	8/11	8/11

owner and maintainer of the new rail network
RAILINFRASTRUCTURE CORPORATION

RIC ENGINEERING
CIVIL DESIGN
* SIGNED ON ORIGINAL

DRAWN * C CALLAGHAN
DESIGNED * A NG
DRG CHECKED * N SHARP
DESIGN VERIFIED * P PRASAD
GROUP LEADER * P PRASAD
*K. Chong 30/06/03
PRINCIPAL DESIGN ENGINEER, CIVIL DATE

WARNING SCANNED IMAGE

STANDARD
PRECAST WINGWALL UNIT TYPE C
TO SUIT 1200 TO 1800 HIGH BOX CULVERT UNIT

PRECAST REINFORCED CONCRETE DETAILS ©

This drawing is protected by copyright. You may not reproduce any of it in any form without the written permission of the Rail Infrastructure Corporation. If you do, you may have to pay damages to the Rail Infrastructure Corporation or you may be prosecuted.

FILE No. A / 03 / 083	SHEET 1 OF 1	A1
T.M.C. PW 260000	No. CV 0041439	B

C CALLAGHAN

DF 801x554

ccallagh 23-OCT-2003 09:37 n:\Groups\Civ des\Online1\std drgs\culverts\stdww1218C.dgn

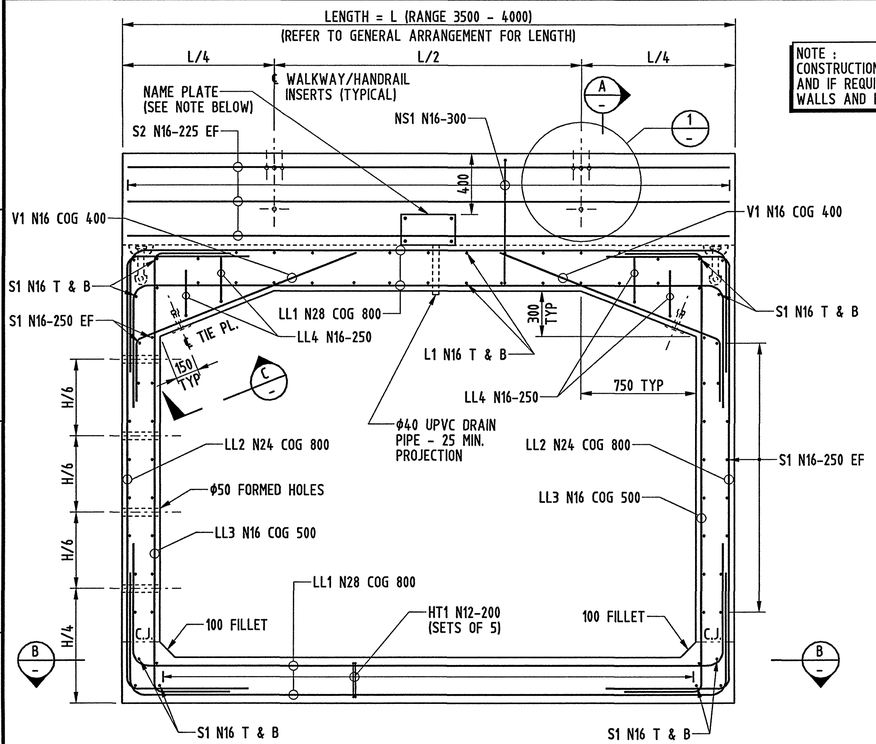

NOTE :
LIFTING ANCHOR BARS NOT SHOWN FOR CLARITY

ELEVATION
SCALE 1:20

NOTE :
ATTACH NAME PLATE TO CENTRE OF OUTSIDE FACE OF KERB OF ONE CULVERT UNIT USING RAMSET OR OTHER NON- REMOVABLE THEFT RESISTANT FASTENING (REFER GENERAL ARRANGEMENT FOR DETAILS)

FOR UNIT MASS REFER TO GENERAL ARRANGEMENT

NOTE :
CONSTRUCTION JOINTS (C.J.) ARE OPTIONAL AND IF REQUIRED SHALL BE LOCATED IN WALLS AND KERB AT LOCATIONS SHOWN

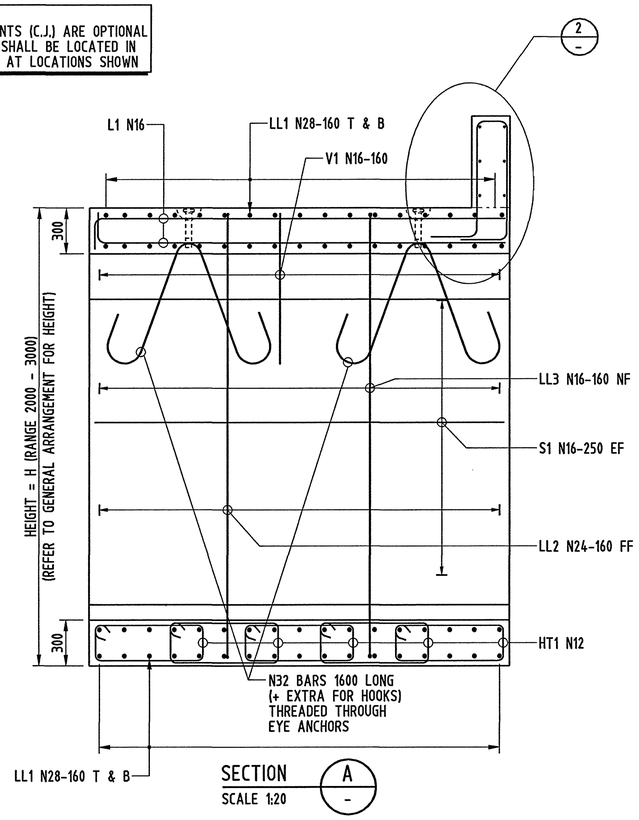

SECTION A
SCALE 1:20

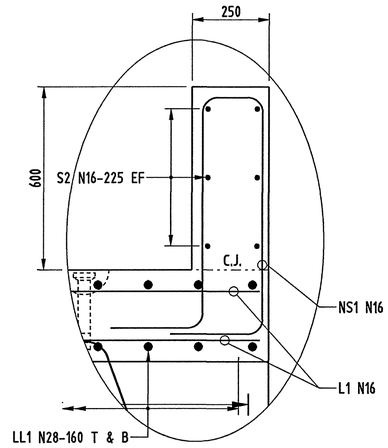

DETAIL 2
SCALE 1:10

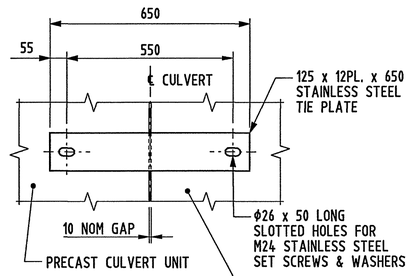

VIEW C
SCALE 1:10

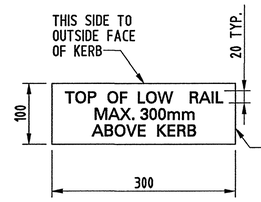

KERB STAMP DETAIL
SCALE 1:5

NOTES

GENERAL
1. DIMENSIONS SHALL NOT BE SCALED FROM THIS DRAWING.

DESIGN
1. CODE : AUSTRALIAN BRIDGE DESIGN CODE 1996 AND AS 1597.2 1996.
2. LOADING: 350LA + APPLICABLE DYNAMIC LOAD ALLOWANCE.
3. BALLAST DEPTH : 300 MIN. & 600 MAX.

PRECAST CONCRETE
1. ALL CONCRETE WORK SHALL COMPLY WITH RTA QA SPECS B80 JUNE 2000 AND B115 JULY 1997.
2. CONCRETE 28 DAY COMPRESSIVE STRENGTH f'c = 50 MPa.
3. EXPOSURE CLASSIFICATION = B1.
4. 25mm CHAMFERS & FILLETS SHALL BE PROVIDED TO ALL EXPOSED EDGES AND CORNERS UNO.

REINFORCEMENT
1. ALL REINFORCEMENT BARS SHALL BE IN ACCORDANCE WITH AS/NZS 4671 WHERE FOR ALL BARS
   - N DENOTES GRADE 500N DEFORMED RIBBED BAR
2. DESIGNATION OF REINFORCING BARS : S1 N24-200 EF
   - BAR SHAPE NOTATION
   - DUCTILITY CLASS AND DIA.
   - SPACING OF BARS
   - LOCATION COMMENT
3. THE FOLLOWING ABBREVIATIONS APPLY TO THE LOCATION OF REINFORCEMENT :
   - EW - EACH WAY
   - EF - EACH FACE
   - NF - NEAR FACE
   - FF - FAR FACE
   - T - TOP
   - B - BOTTOM
   - CP - CENTRALLY PLACED
4. CLEAR COVER TO REINFORCEMENT SHALL BE 35mm.
5. COGS, HOOKS, SPLICES AND PIN DIAMETERS SHALL BE IN ACCORDANCE WITH AUSTRALIAN BRIDGE DESIGN CODE 1996 UNO.
6. SPLICES IN REINFORCEMENT SHALL BE MADE ONLY IN POSITIONS SHOWN OR AS APPROVED IN WRITING BY THE SUPERINTENDENT.
7. BAR SHAPES ARE IN ACCORDANCE WITH AS 1100.501-1985.

HANDLING
1. ALL ANCHORS SHALL BE INSTALLED IN ACCORDANCE WITH THE MANUFACTURER'S ("REIDS") WRITTEN INSTRUCTIONS.
2. MAXIMUM SLING ANGLE FOR LIFTING ROPES IS 90°.
3. FABRICATOR TO ENSURE ANCHOR CAPACITIES ARE NOT EXCEEDED DURING DEMOULDING/STRIPPING.

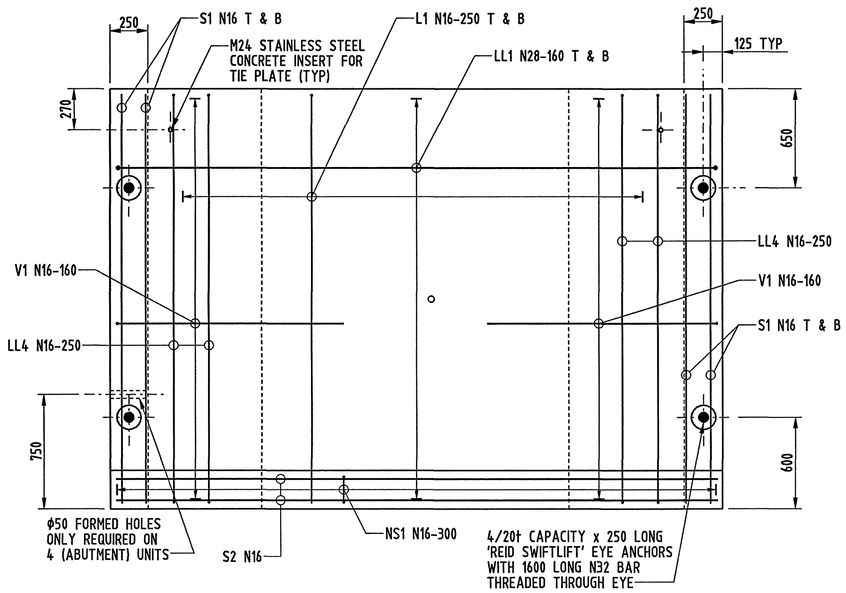

NOTE :
CULVERT LEG REINFORCEMENT NOT SHOWN FOR CLARITY

P L A N
SCALE 1:20

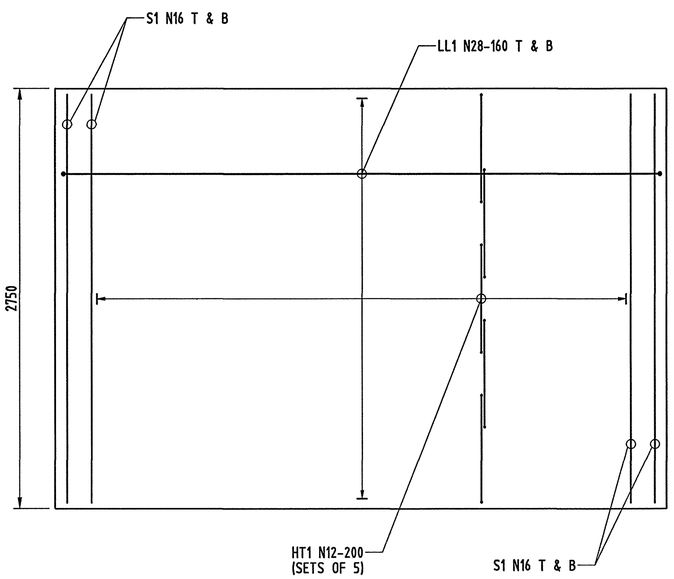

SECTION B
SCALE 1:20

NOTE :
CULVERT LEG REINFORCEMENT NOT SHOWN FOR CLARITY

NOTE :
PROVISION IS FOR WALKWAY OR HANDRAIL ON EITHER SIDE OF CULVERT

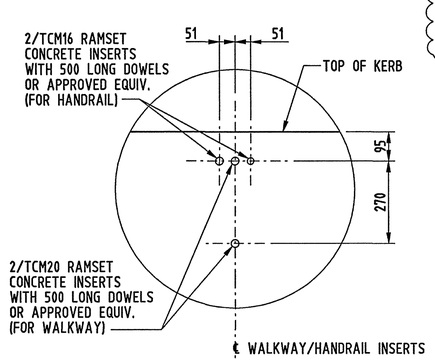

NOTE:
PRESS FIT PLASTIC PLUGS REQUIRED FOR EACH INSERT. PLUGS TO BE REMOVED FOR WALKWAY/HANDRAIL ERECTION AND TO REMAIN IN UNUSED INSERTS.

DETAIL 1
SCALE 1:10

REFERENCE

STANDARD PRECAST WINGWALL UNIT TYPE B .....DRG No. CV 0078338
(WITH BOLTED CONNECTION TO WINGWALLS)
STANDARD PRECAST WINGWALL UNIT .....DRG No. CV 0041441
(WITHOUT BOLTED CONNECTION TO WINGWALLS)

AMD	REFERENCE	DESCRIPTION	VERIFIED SIGN / DATE	APPROVED SIGN / DATE
C	F11-F12	ADDITIONAL DRAWING REFERENCE	12/3/04	12/3/04
B	A3, E1, C1, G1, F5, C11	NAME PLATE LOCATION ALTERED FORMED HOLES ADDED DIMENSION ADDED, NOTE ADDED	P.P. 21/10/03	P.P. 21/10/03

owner and maintainer of the new rail network
RAILINFRASTRUCTURE CORPORATION

RIC ENGINEERING
CIVIL DESIGN
* SIGNED ON ORIGINAL

DRAWN * C CALLAGHAN
DESIGNED * A NG
DRG CHECKED * N SHARP
DESIGN VERIFIED * P PRASAD
GROUP LEADER * P PRASAD
* K. Chong 30/06/03
PRINCIPAL DESIGN ENGINEER, CIVIL — DATE

WARNING SCANNED IMAGE

STANDARD

PRECAST SINGLE CELL BOX CULVERT UNIT 2000 TO 3000 OVERALL CELL HEIGHT

PRECAST REINFORCED CONCRETE DETAILS ©

FILE No. A / 03 / 083	SHEET 1 OF 1	A1
T.M.C. PW 260000	No. CV 0041440	C

This drawing is protected by copyright. You may not reproduce any of it in any form without the written permission of the Rail Infrastructure Corporation. If you do, you may have to pay damages to the Rail Infrastructure Corporation or you may be prosecuted.

C CALLAGHAN

DF 801x554

stran 12-MAR-2004 11:52 u:\Common\dgn\2004\standards\culverts\stddblbxcv2m3m.dgn

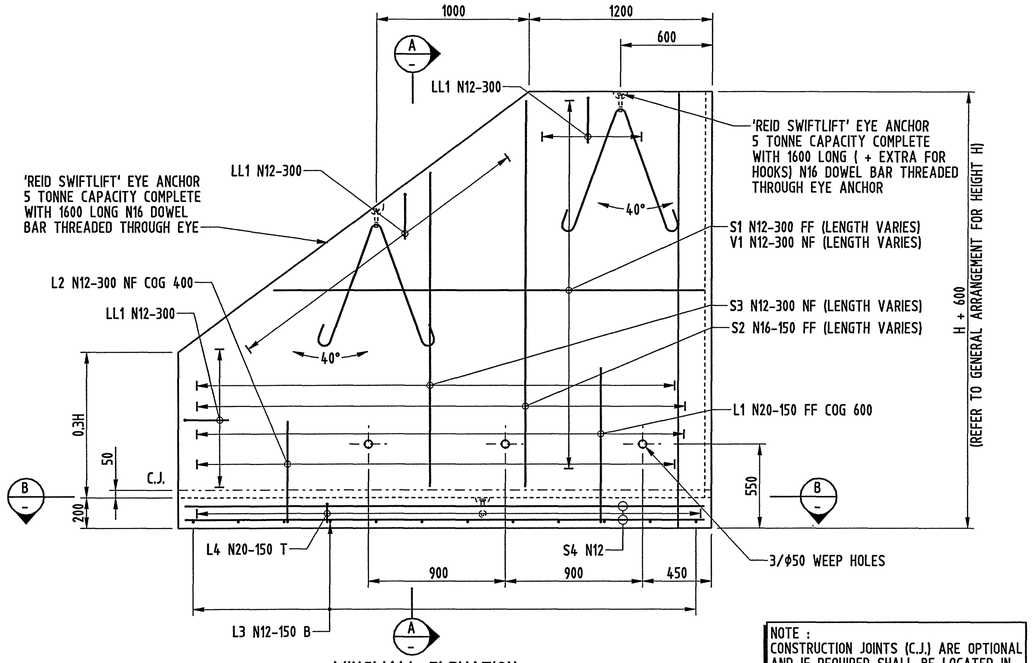

WINGWALL ELEVATION

SCALE 1:20

FOR UNIT MASS REFER TO GENERAL ARRANGEMENT

NOTE :
CONSTRUCTION JOINTS (C.J.) ARE OPTIONAL AND IF REQUIRED SHALL BE LOCATED IN WALLS AND KERB AT LOCATIONS SHOWN

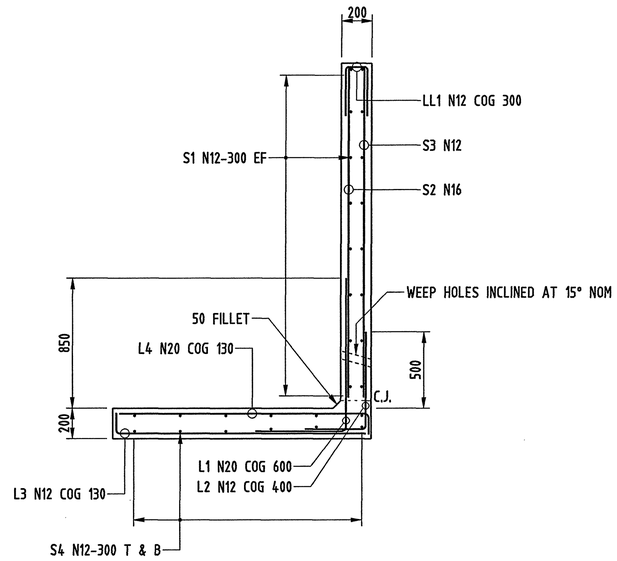

SECTION A

SCALE 1:20

NOTES

GENERAL

1. DIMENSIONS SHALL NOT BE SCALED FROM THIS DRAWING.

DESIGN

1. CODE : AUSTRALIAN BRIDGE DESIGN CODE 1996.
2. LOADING: 350LA + APPLICABLE DYNAMIC LOAD ALLOWANCE.

PRECAST CONCRETE

1. ALL CONCRETE WORK SHALL COMPLY WITH RTA QA SPECS B80 JUNE 2000 AND B115 JULY 1997.
2. CONCRETE 28 DAY COMPRESSIVE STRENGTH f'c = 50 MPa.
3. EXPOSURE CLASSIFICATION = B1.
4. 25mm CHAMFERS & FILLETS SHALL BE PROVIDED TO ALL EXPOSED EDGES AND CORNERS UNO.

REINFORCEMENT

1. ALL REINFORCEMENT BARS SHALL BE IN ACCORDANCE WITH AS/NZS 4671 WHERE FOR ALL BARS
   - N DENOTES GRADE 500N DEFORMED RIBBED BAR
2. DESIGNATION OF REINFORCING BARS : S1 N24-200 EF
   - BAR SHAPE NOTATION
   - DUCTILITY CLASS AND DIA.
   - SPACING OF BARS
   - LOCATION COMMENT
3. THE FOLLOWING ABBREVIATIONS APPLY TO THE LOCATION OF REINFORCEMENT :
   - EW - EACH WAY
   - EF - EACH FACE
   - NF - NEAR FACE
   - FF - FAR FACE
   - T - TOP
   - B - BOTTOM
   - CP - CENTRALLY PLACED
4. CLEAR COVER TO REINFORCEMENT SHALL BE 35mm.
5. COGS, HOOKS, SPLICES AND PIN DIAMETERS SHALL BE IN ACCORDANCE WITH AUSTRALIAN BRIDGE DESIGN CODE 1996 UNO.
6. SPLICES IN REINFORCEMENT SHALL BE MADE ONLY IN POSITIONS SHOWN OR AS APPROVED IN WRITING BY THE SUPERINTENDENT.
7. BAR SHAPES ARE IN ACCORDANCE WITH AS 1100.501-1985.

HANDLING

1. ALL ANCHORS SHALL BE INSTALLED IN ACCORDANCE WITH THE MANUFACTURER'S ("REIDS") WRITTEN INSTRUCTIONS.
2. MAXIMUM SLING ANGLE FOR LIFTING ROPES IS 45°.
3. FABRICATOR TO ENSURE ANCHOR CAPACITIES ARE NOT EXCEEDED DURING DEMOULDING/STRIPPING.

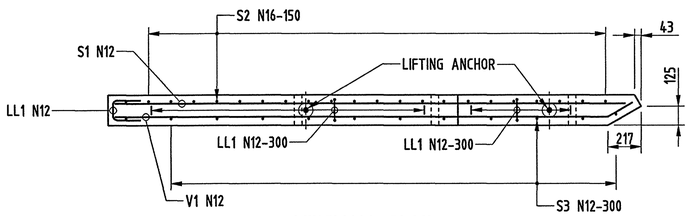

WINGWALL PLAN

SCALE 1:20

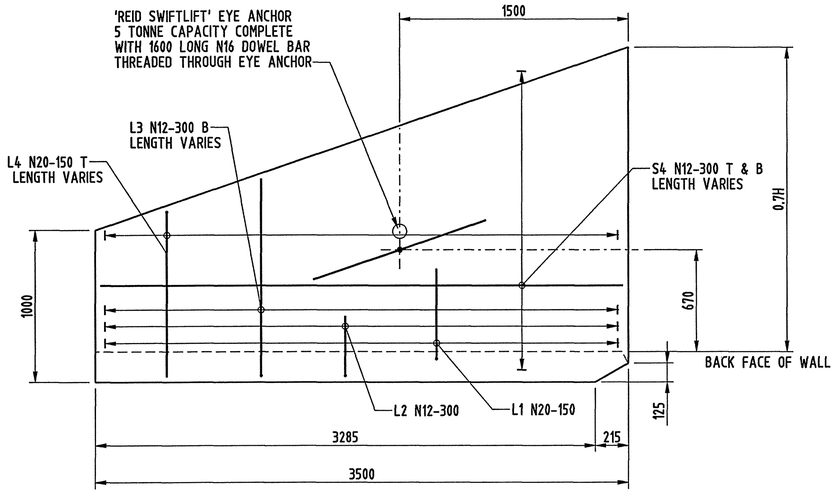

SECTION B

SCALE 1:20

2 REQUIRED AS DRAWN
2 REQUIRED OPPOSITE HAND

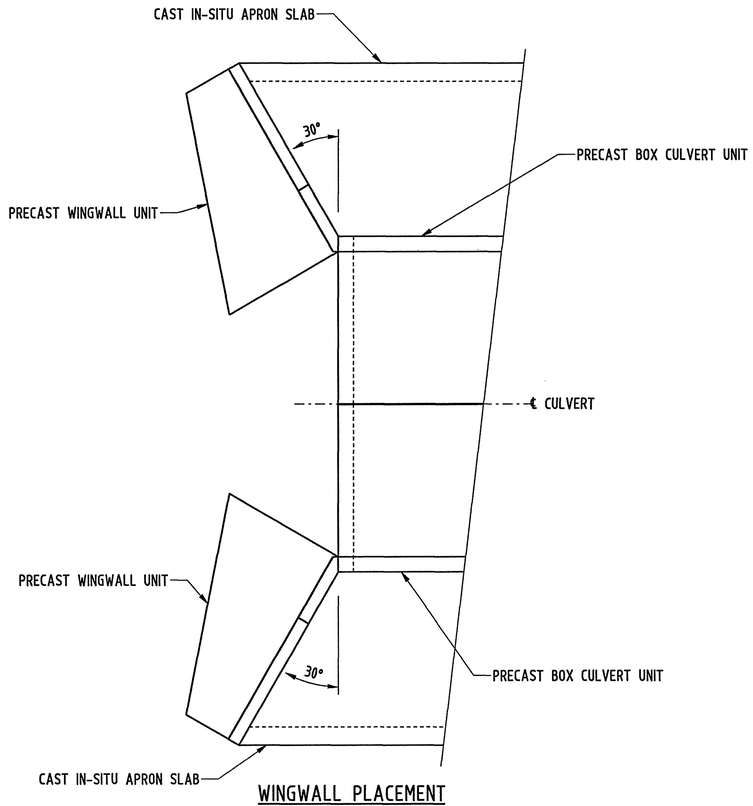

WINGWALL PLACEMENT

SCALE 1:50

REFERENCE

STANDARD PRECAST SINGLE CELL
BOX CULVERT UNIT 2000 TO 3000 HIGH.....DRG No. CV 0041440

AMD	REFERENCE	DESCRIPTION	VERIFIED SIGN / DATE	APPROVED SIGN / DATE

owner and maintainer of the new rail network
RAILINFRASTRUCTURE CORPORATION

RIC ENGINEERING
CIVIL DESIGN

DRAWN
DESIGNED
DRG CHECKED
DESIGN VERIFIED
PROJECT LEADER
30.6.03
PRINCIPAL DESIGN ENGINEER, CIVIL — DATE

STANDARD

PRECAST WINGWALL UNIT TO SUIT 2000 TO 3000 HIGH BOX CULVERT UNIT

PRECAST REINFORCED CONCRETE DETAILS ©

FILE No. A / 03 / 083	SHEET 1 OF 1	A1
T.M.C. PW 260000	No. CV 0041441	A

S. TRAN

DF 801×554

This drawing is protected by copyright. You may not reproduce any of it in any form without the written permission of the Rail Infrastructure Corporation. If you do, you may have to pay damages to the Rail Infrastructure Corporation or you may be prosecuted.

twatson 01-JUL-2003 11:49 N:\Groups\Civ des\Online1\std drgs\culverts\stdww2m3m.dgn

AC-020

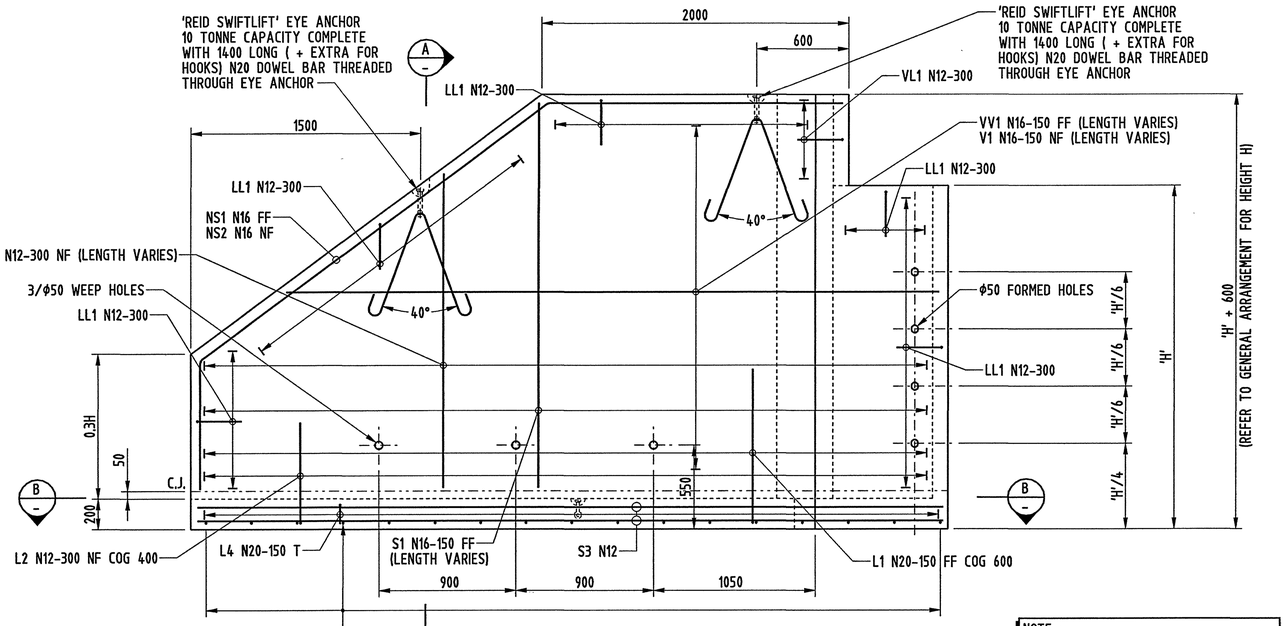

WINGWALL ELEVATION
SCALE 1:20

NOTE :
CONSTRUCTION JOINTS (C.J.) ARE OPTIONAL AND IF REQUIRED SHALL BE LOCATED IN WALLS AND KERB AT LOCATIONS SHOWN

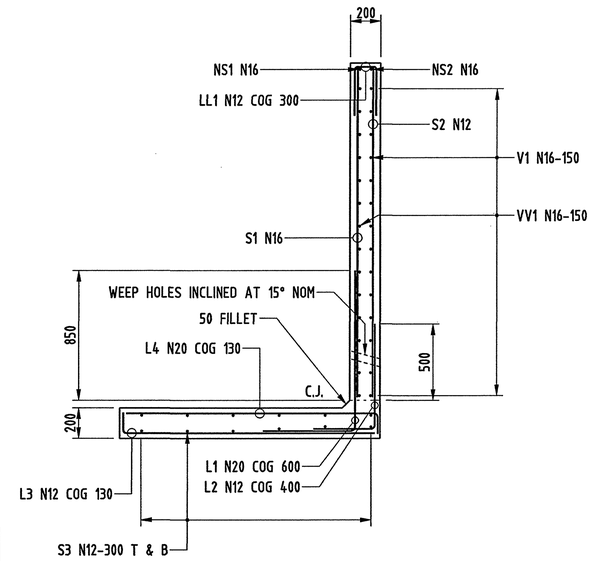

SECTION A
SCALE 1:20

NOTES

GENERAL
1. DIMENSIONS SHALL NOT BE SCALED FROM THIS DRAWING.

DESIGN
1. CODE : AUSTRALIAN BRIDGE DESIGN CODE 1996.
2. LOADING: 350LA + APPLICABLE DYNAMIC LOAD ALLOWANCE.

PRECAST CONCRETE
1. ALL CONCRETE WORK SHALL COMPLY WITH RTA QA SPECS B80 JUNE 2000 AND B115 JULY 1997.
2. CONCRETE 28 DAY COMPRESSIVE STRENGTH f'c = 50 MPa.
3. EXPOSURE CLASSIFICATION = B1.
4. 25mm CHAMFERS & FILLETS SHALL BE PROVIDED TO ALL EXPOSED EDGES AND CORNERS UNO.

REINFORCEMENT
1. ALL REINFORCEMENT BARS SHALL BE IN ACCORDANCE WITH AS/NZS 4671 WHERE FOR ALL BARS
   - N DENOTES GRADE 500N DEFORMED RIBBED BAR
2. DESIGNATION OF REINFORCING BARS : S1 N24-200 EF
   BAR SHAPE NOTATION
   DUCTILITY CLASS AND DIA.
   SPACING OF BARS
   LOCATION COMMENT
3. THE FOLLOWING ABBREVIATIONS APPLY TO THE LOCATION OF REINFORCEMENT :
   EW - EACH WAY T - TOP
   EF - EACH FACE B - BOTTOM
   NF - NEAR FACE CP - CENTRALLY PLACED
   FF - FAR FACE
4. CLEAR COVER TO REINFORCEMENT SHALL BE 35mm.
5. COGS, HOOKS, SPLICES AND PIN DIAMETERS SHALL BE IN ACCORDANCE WITH AUSTRALIAN BRIDGE DESIGN CODE 1996 UNO.
6. SPLICES IN REINFORCEMENT SHALL BE MADE ONLY IN POSITIONS SHOWN OR AS APPROVED IN WRITING BY THE SUPERINTENDENT.
7. BAR SHAPES ARE IN ACCORDANCE WITH AS 1100.501-1985.

HANDLING
1. ALL ANCHORS SHALL BE INSTALLED IN ACCORDANCE WITH THE MANUFACTURER'S ("REIDS") WRITTEN INSTRUCTIONS.
2. FABRICATOR TO ENSURE ANCHOR CAPACITIES ARE NOT EXCEEDED DURING DEMOULDING/STRIPPING.
3. MAXIMUM SLING ANGLE FOR LIFTING ROPES IS 45°.

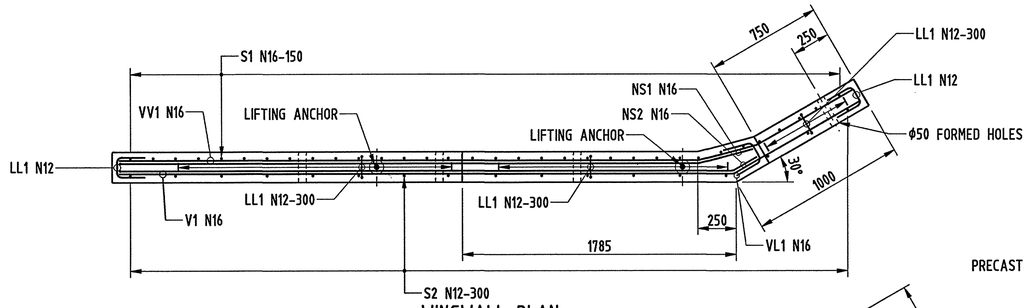

WINGWALL PLAN
SCALE 1:20

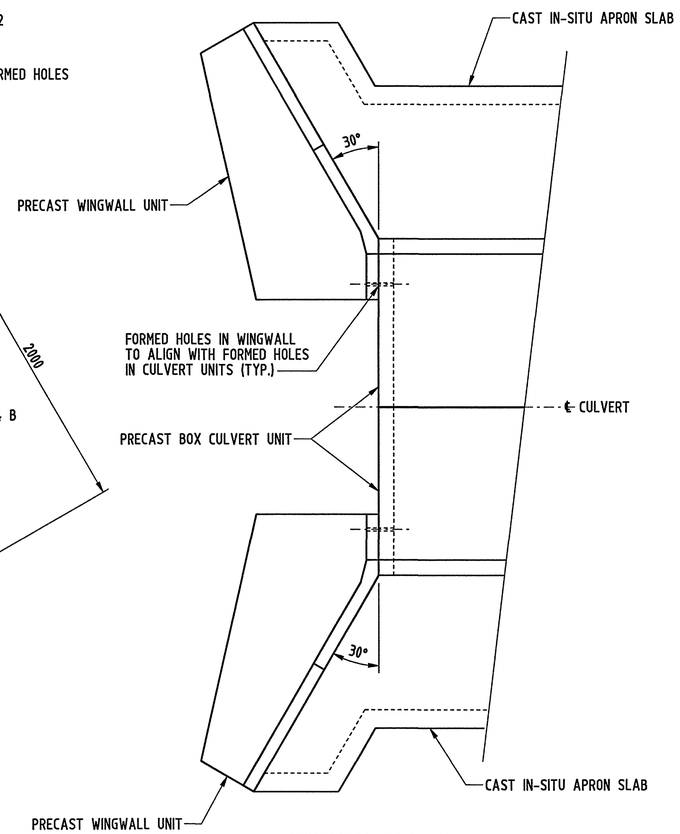

WINGWALL PLACEMENT
SCALE 1:50

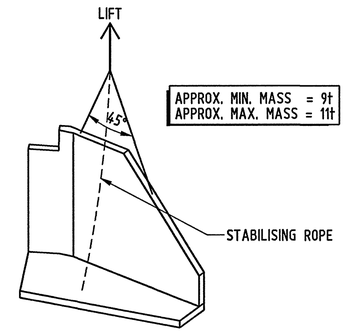

LIFTING DIAGRAM
NOT TO SCALE

REFERENCE
STANDARD PRECAST SINGLE CELL
BOX CULVERT UNIT 2000 TO 3000 HIGH.....DRG No. CV 0041440

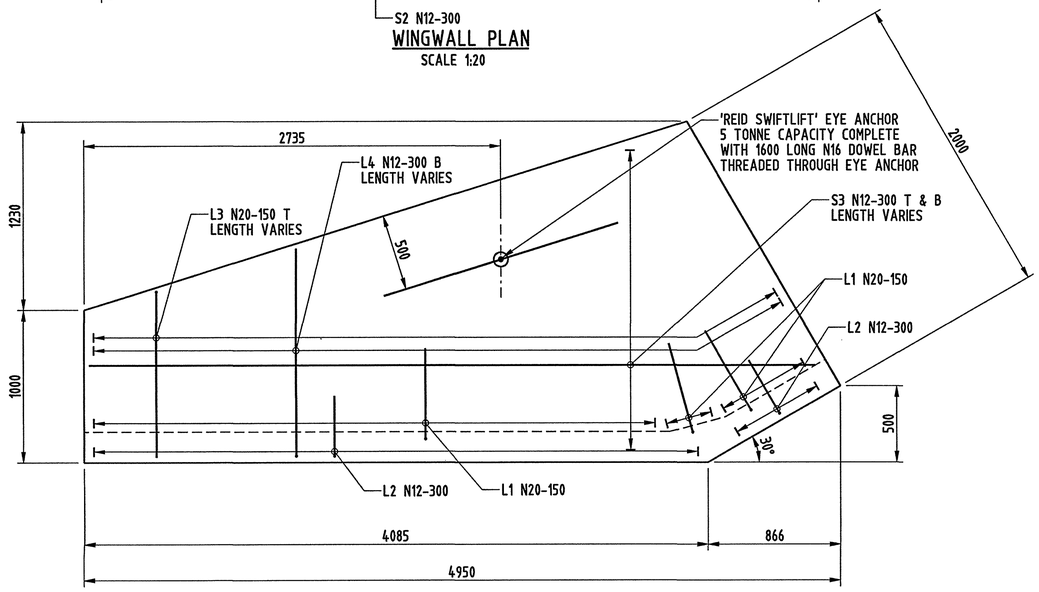

SECTION B
SCALE 1:20

2 REQUIRED AS DRAWN
2 REQUIRED OPPOSITE HAND

AMD	REFERENCE	DESCRIPTION	VERIFIED SIGN / DATE	APPROVED SIGN / DATE

owner and maintainer of the new rail network
RAILINFRASTRUCTURE CORPORATION

RIC ENGINEERING
CIVIL DESIGN

DRAWN
DESIGNED
DRG CHECKED
DESIGN VERIFIED
GROUP LEADER
22.10.03
PRINCIPAL DESIGN ENGINEER, CIVIL DATE

WARNING SCANNED IMAGE

STANDARD
PRECAST WINGWALL UNIT TYPE B
TO SUIT 2000 TO 3000 HIGH BOX CULVERT UNIT
PRECAST REINFORCED CONCRETE DETAILS ©

FILE No. A / 03 / 083	SHEET 1 OF 1	A1
T.M.C. PW 260000	No. CV 0078338	A

This drawing is protected by copyright. You may not reproduce any of it in any form without the written permission of the Rail Infrastructure Corporation. If you do, you may have to pay damages to the Rail Infrastructure Corporation or you may be prosecuted.

C CALLAGHAN

DF 801x554

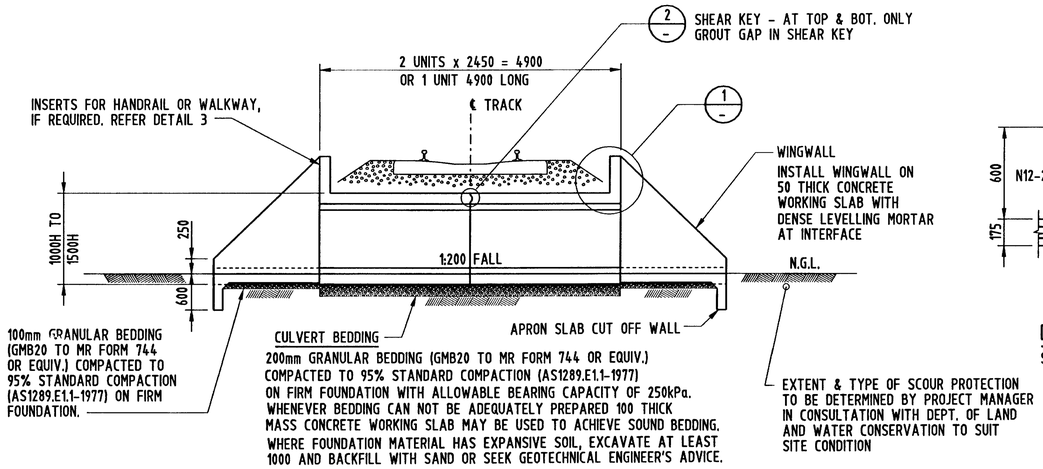

SECTION THROUGH CULVERT
SCALE 1:50

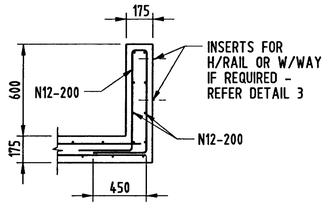

DETAIL 1 -
SCALE 1:20

NOTE:
PROVISION IS FOR WALKWAY OR HANDRAIL ON BOTH SIDES OF CULVERT.

NOTE:
PRESS FIT PLASTIC PLUGS REQUIRED FOR EACH INSERT. TO BE REMOVED UPON WALKWAY/HANDRAIL ERECTION. PLUGS TO REMAIN IN UNUSED INSERTS.

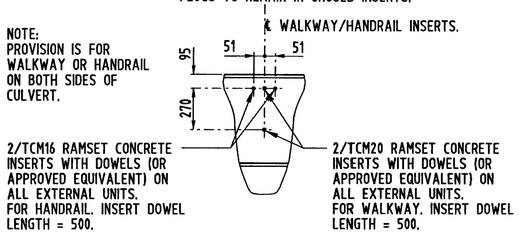

WALKWAY / HANDRAIL CONNECTION DETAIL

DETAIL 3 -
SCALE 1:20

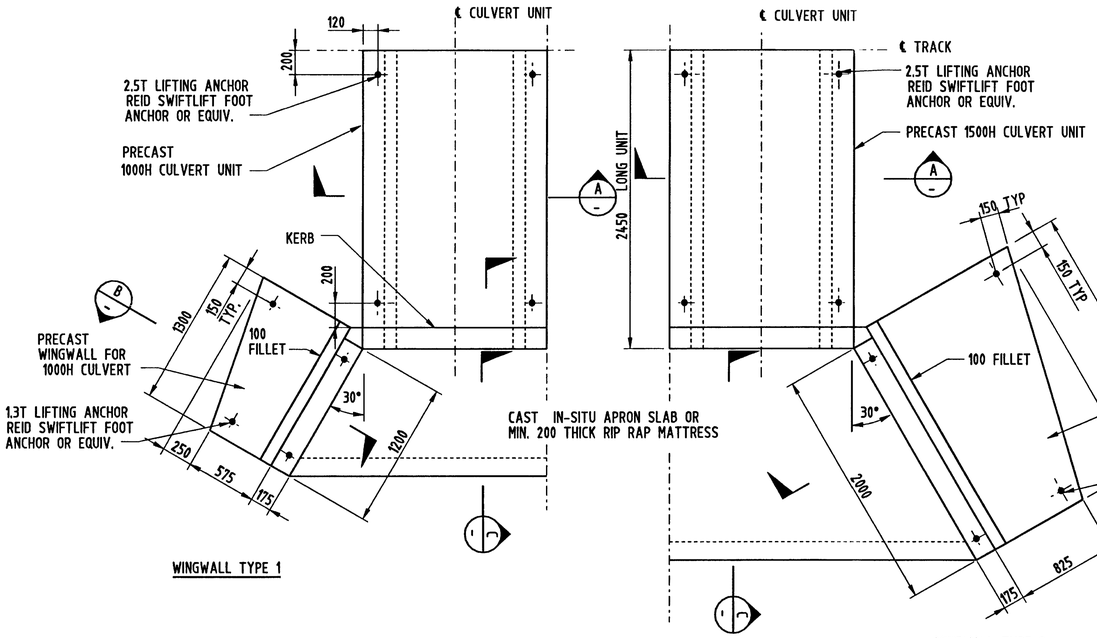

PART PLAN 1000 HIGH CULVERT
SCALE 1:25

PART PLAN 1500 HIGH CULVERT
SCALE 1:25

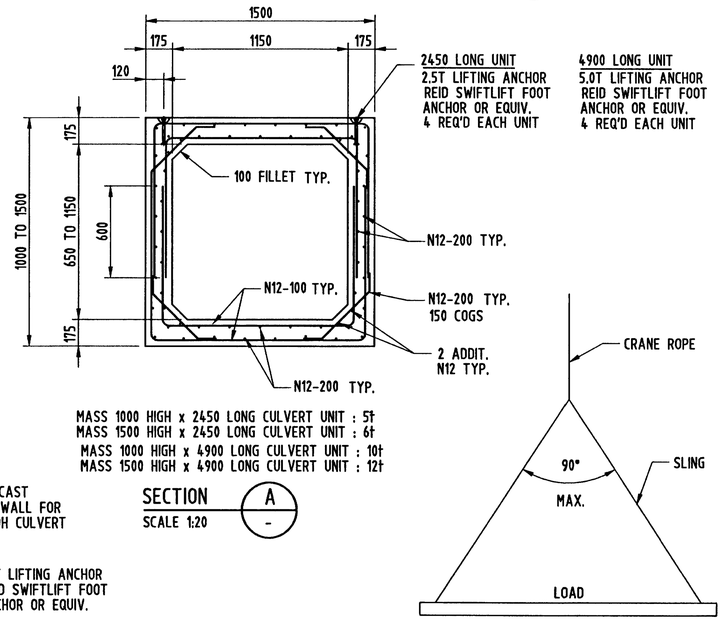

MASS 1000 HIGH x 2450 LONG CULVERT UNIT : 5t
MASS 1500 HIGH x 2450 LONG CULVERT UNIT : 6t
MASS 1000 HIGH x 4900 LONG CULVERT UNIT : 10t
MASS 1500 HIGH x 4900 LONG CULVERT UNIT : 12t

SECTION A -
SCALE 1:20

LIFTING SLING ANGLE
N.T.S.

SCOPE OF WORK

EXTENT OF PRECAST CONCRETE WORK

1. MANUFACTURE OF PRECAST CONCRETE BOX CULVERT UNITS.
2. MANUFACTURE OF PRECAST CONCRETE WINGWALLS.
3. DELIVERY OF PRECAST CONCRETE BOX UNITS AND WINGWALL UNITS TO THE BRIDGE SITE.

EXTENT AND SEQUENCE OF RSA WORK

1. REMOVAL OF TRACKWORK FROM THE EXISTING BRIDGE.
2. DEMOLITION OF EXISTING STRUCTURE.
3. PREPARATION OF FOUNDATION FOR PRECAST CULVERTS, WINGWALLS AND APRON SLABS, INCLUDING PLACEMENT AND COMPACTION OF BEDDING LAYER.
4. INSTALLATION OF PRECAST CULVERTS AND WINGWALLS.
5. CONSTRUCTION OF APPROACH EMBANKMENTS INCLUDING CAPPING LAYER.
6. REINSTATEMENT OF ALL TRACKWORK.
7. CONSTRUCTION OF APRON SLABS.
8. RE-GRADING OF CHANNEL TO SUIT CULVERTS AND INSTALLATION OF SCOUR PROTECTION.
9. ANY OTHER WORK ASSOCIATED WITH ON-SITE CONSTRUCTION AND INSTALLATION WORK.
10. SITE RESTORATION.

NOTES

GENERAL

1. DIMENSIONS SHALL NOT BE SCALED FROM THIS DRAWING.

DESIGN

1. DESIGN CODE : AUSTRALIAN BRIDGE DESIGN CODE - 1996.
2. DESIGN LOADING : 300-A-12 + 1.0 DYNAMIC LOAD ALLOWANCE + 300 MIN. & 600 MAX. BALLAST BELOW SLEEPERS.
3. PROJECT MANAGER TO DETERMINE NUMBER OF CULVERT UNITS TO SUIT LOCAL HYDROLOGY/HYDRAULICS.

SURVEY

1. LEVELS AND CO-ORDINATES TO BE DETERMINED BY RSA DIVISION ENGINEER.

CONCRETE - PRECAST AND IN - SITU

1. ALL CONCRETE TO BE MIXED PLACED, AND CURED IN ACCORDANCE WITH RTA FORM 2080.
2. F'c TO BE 40MPa WITH MAX. AGGREGATE SIZE 20 AND MAX. SLUMP 80. CEMENT TYPE 'A'.
3. SURFACE FINISH TO BE 'CLASS 2' FOR ALL EXPOSED SURFACES. OTHER SURFACES TO BE 'CLASS 1'
4. CLEAR COVER TO BE 35 U.N.O.
5. CHAMFERS AND FILLETS TO BE 25 U.N.O.
6. CONSTRUCTION JOINTS TO BE ADEQUATELY SCABBLED. THOROUGHLY CLEAN PRIOR TO CONCRETE POUR.

REINFORCEMENT

1. ALL REINFORCEMENT BARS SHALL BE IN ACCORDANCE WITH AS/NZS 4671, WHERE
   N DENOTES GRADE 500N DEFORMED RIBBED BAR
   SL DENOTES GRADE 500L SQUARE RIBBED WIRE MESH
2. ALL PIN DIAMETERS TO BE 4 TIMES THE BAR DIAMETER (4D).

CEMENT MORTAR

1. 1 PART CEMENT: 3 PARTS SAND BY VOLUME. WATER CONTENT TO BE MINIMUM REQUIRED FOR PROPER PLACEMENT.

WINGWALLS

1. WINGWALLS FOR ANY CULVERT BETWEEN 1000 & 1500 HIGH:
   USE TYPE 1 FOR CULVERT UNIT HEIGHT UP TO 1250
   USE TYPE 2 FOR CULVERT UNIT HEIGHT ABOVE 1250.

THIS DRAWING ADAPTED FROM DRG CV 0147675
MANAGER, CIVIL DESIGN 27/09/01

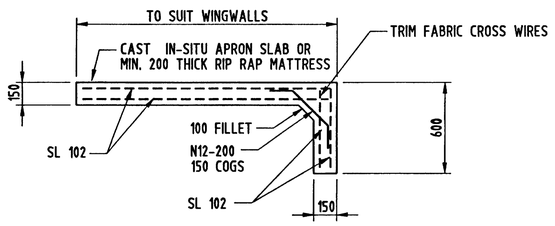

SECTION C -
SCALE 1:20

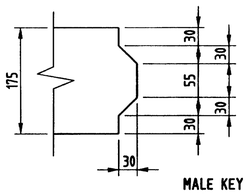

MALE KEY DETAIL SHOWN.
FEMALE KEY TO SUIT

KEY DETAIL

DETAIL 2 -
SCALE 1:5

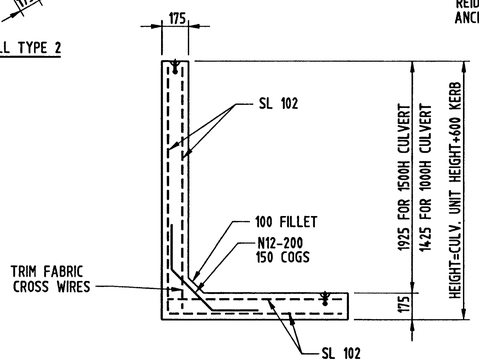

MASS 1000 HIGH CULVERT UNIT WINGWALL : 0.7t
MASS 1500 HIGH CULVERT UNIT WINGWALL : 2t

SECTION B -
SCALE 1:20

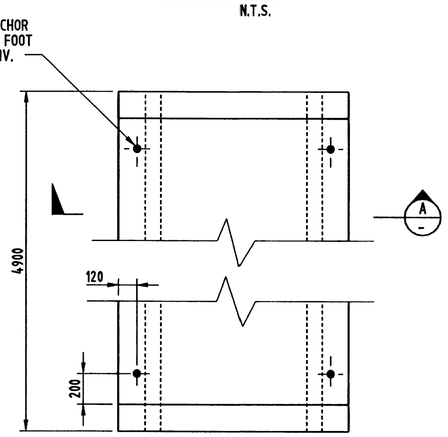

PLAN 4900 LONG CULVERT UNIT
SCALE 1:25

AMD	REFERENCE	DESCRIPTION	VERIFIED SIGN / DATE	APPROVED SIGN / DATE

owner and maintainer of the new rail network
RAILINFRASTRUCTURE CORPORATION

RIC CONSULTING CIVIL DESIGN

DRAWN	* N.M.S.
DESIGNED	* A.V.-G
DRG CHECKED	* A.V.-G
DESIGN VERIFIED	* P.P.
PROJECT LEADER	* P.P.
MANAGER, CIVIL DESIGN	* K. Chong 29/07/99 (DATE)

* SIGNED ON ORIGINAL OF DRG CV 0147675

WARNING SCANNED IMAGE

VARIOUS LOCATIONS
VARIOUS LINES
CULVERT
BOX CULVERT 1500 x 1000 TO 1500 HIGH
CONCRETE DETAILS

This drawing is protected by copyright. You may not reproduce any of it in any form without the written permission of the Rail Infrastructure Corporation. If you do, you may have to pay damages to the Rail Infrastructure Corporation or you may be prosecuted. ©

FILE No. A / 02372	SHEET 1 OF 1	A1
T.M.C. PW 310000	No. CV 0171059	A

N. SHARP DF 801-554

NSharp 27-SEP-2001 09:54 u:\COMMON\dgn\2001\culverts\Various Locns 1\vlcvct.dgn

AC-022

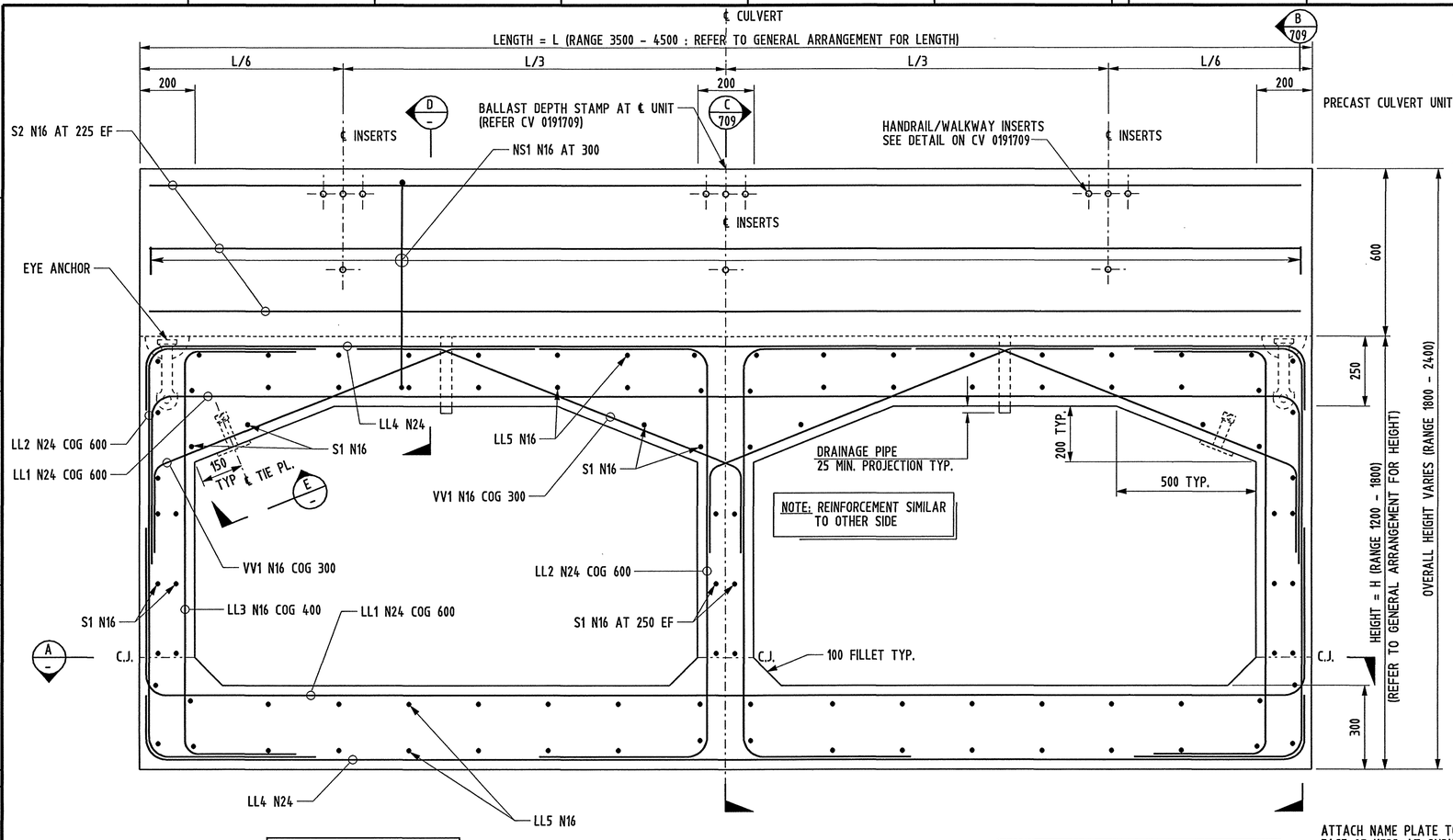

NOTE: LIFTING ANCHOR BARS NOT SHOWN FOR CLARITY

ELEVATION

SCALE 1:10

FOR UNIT MASS, REFER TO GENERAL ARRANGEMENT FOR SPECIFIC PROJECT

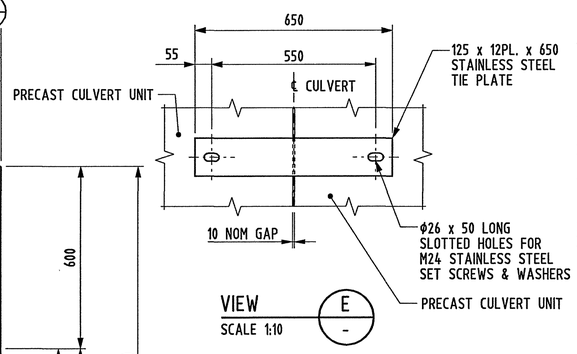

VIEW E

SCALE 1:10

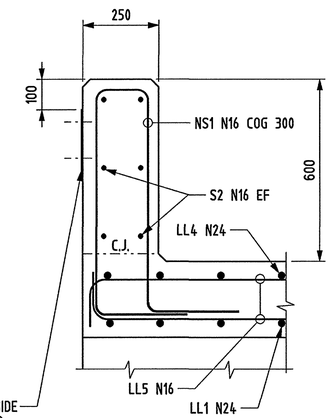

SECTION D

SCALE 1:10

NOTES

GENERAL

1. DIMENSIONS SHALL NOT BE SCALED FROM THIS DRAWING.

DESIGN

1. CODE : AUSTRALIAN BRIDGE DESIGN CODE 1996 AND AS 1597.2 1996.
2. LOADING: LA350-A-12+DYNAMIC LOAD ALLOWANCE.
3. BALLAST DEPTH : 300 MIN. & 600 MAX.

PRECAST CONCRETE

1. ALL CONCRETE WORK SHALL COMPLY WITH RTA QA SPECS B80 JUNE 2000 AND B115 JULY 1997.
2. CONCRETE 28 DAY COMPRESSIVE STRENGTH f'c = 50 MPa.
3. EXPOSURE CLASSIFICATION = B1.

REINFORCEMENT

1. ALL REINFORCEMENT BARS SHALL BE IN ACCORDANCE WITH AS/NZS 4671, WHERE ALL BARS (INCLUDING WELDED MESH)
   N DENOTES GRADE 500N DEFORMED RIBBED BAR
   RL DENOTES GRADE 500L RECTANGULAR RIBBED WIRE MESH
   SL DENOTES GRADE 500L SQUARE RIBBED WIRE MESH
2. DESIGNATION OF REINFORCING BARS : 10 S1 N24 AT 200 EF
   - No OF BARS
   - BAR SHAPE NOTATION
   - DUCTILITY CLASS AND DIA
   - SPACING OF BARS
   - LOCATION COMMENT
3. THE FOLLOWING ABBREVIATIONS APPLY TO THE LOCATION OF REINFORCEMENT :
   EW - EACH WAY T - TOP
   EF - EACH FACE B - BOTTOM (BOT)
   NF - NEAR FACE CP - CENTRALLY PLACED
   FF - FAR FACE
4. CLEAR COVER TO REINFORCEMENT SHALL BE 35mm.
5. COGS, HOOKS, SPLICES AND PIN DIAMETERS SHALL BE IN ACCORDANCE WITH AUSTRALIAN BRIDGE DESIGN CODE 1996 UNO.
6. SPLICES IN REINFORCEMENT SHALL BE MADE ONLY IN POSITIONS SHOWN OR AS APPROVED IN WRITING BY THE SUPERINTENDENT.
7. MESH SHALL BE LAPPED 2 TRANSVERSE WIRES PLUS 50mm.
8. BAR SHAPES ARE IN ACCORDANCE WITH AS 1100.501-1985.

HANDLING

1. ALL ANCHORS SHALL BE INSTALLED IN ACCORDANCE WITH THE MANUFACTURER'S ("REIDS") WRITTEN INSTRUCTIONS.
2. MAXIMUM SLING ANGLE FOR LIFTING ROPES IS 90°.
3. FABRICATOR TO ENSURE ANCHOR CAPACITIES ARE NOT EXCEEDED DURING DEMOULDING/STRIPPING.

REFERENCE

STANDARD PRECAST BOX CULVERT UNIT (2/2).....DRG. No. CV 0191709

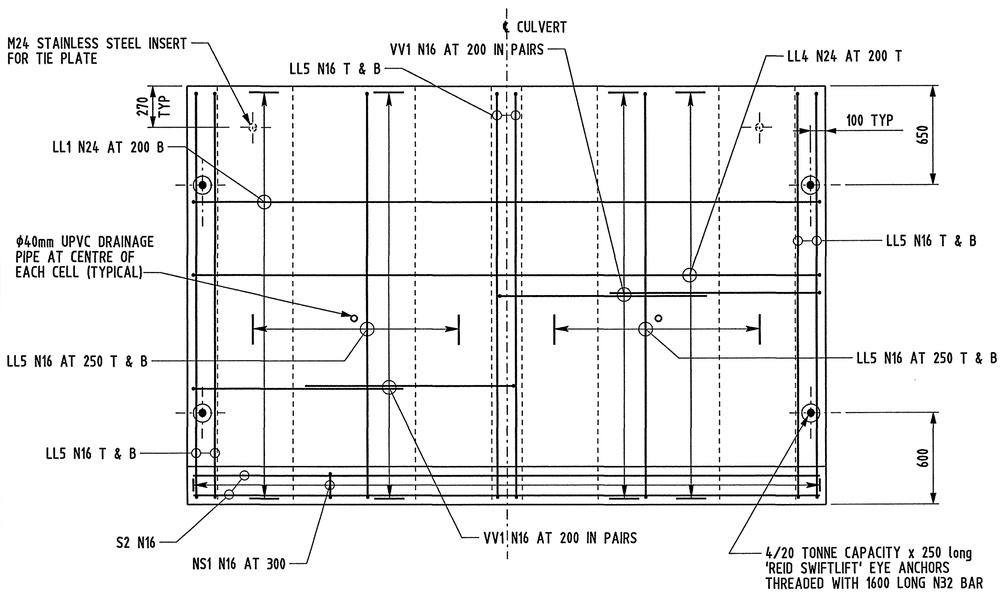

NOTE: CULVERT LEG REINFORCEMENT NOT SHOWN FOR CLARITY

PLAN

SCALE 1:20

NOTE: CONSTRUCTION JOINTS ARE OPTIONAL - IF REQUIRED, CONSTRUCTION JOINTS (C.J.) TO BE LOCATED IN WALLS & KERB AT LOCATIONS SHOWN

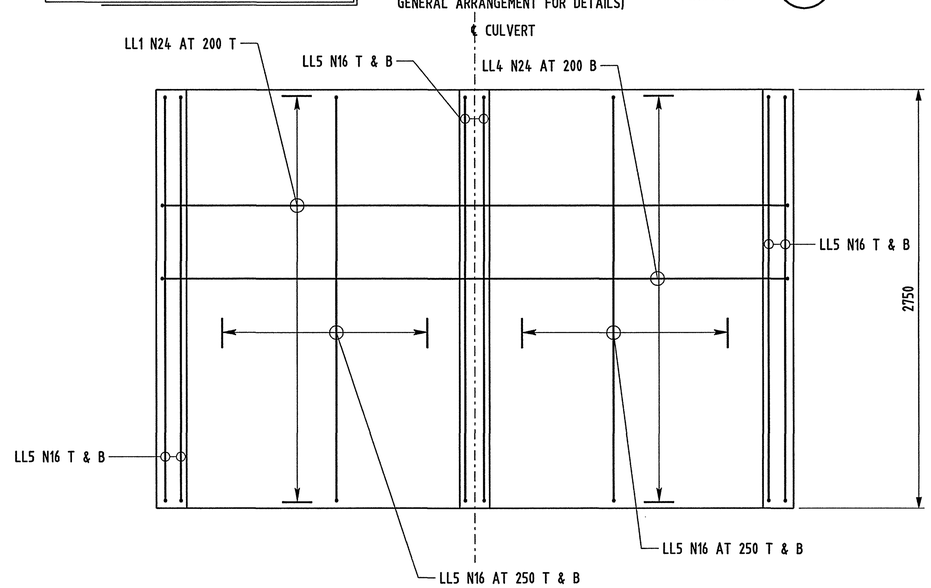

NOTE: CULVERT LEG REINFORCEMENT NOT SHOWN FOR CLARITY

SECTION A

SCALE 1:20

AMD	REFERENCE	DESCRIPTION	VERIFIED SIGN / DATE	APPROVED SIGN / DATE

owner and maintainer of the new rail network
RAILINFRASTRUCTURE CORPORATION

RIC ENGINEERING CIVIL DESIGN

DRAWN
DESIGNED
DRG CHECKED
DESIGN VERIFIED
PROJECT LEADER
6.6.03
PRINCIPAL DESIGN ENGINEER, CIVIL — DATE

STANDARD

PRECAST TWIN CELL BOX CULVERT UNIT AND WINGWALLS – 1800 TO 2400 OVERALL HEIGHT

PRECAST CONCRETE DETAILS – SHEET 1 OF 2 ©

This drawing is protected by copyright. You may not reproduce any of it in any form without the written permission of the Rail Infrastructure Corporation. If you do, you may have to pay damages to the Rail Infrastructure Corporation or you may be prosecuted.

FILE No. A / 03 / 083	SHEET 1 OF 2	A1
T.M.C. PW 260000	No. CV 0191708	A

DF 801x554

I.RAY

nnazare2 06-JUN-2003 10:20 u:\Common\dgn\2003\Standards\stdcvd1.dgn