ARTC

Function: Signalling
Document Type: Standard

Frauscher Axle Counter Systems

ESS-05-06

Applicability

ARTC Network Wide

Publication Requirement

Internal / External

Primary Source

ESD-05-14

Document Status

Version #	Date Reviewed	Prepared by	Endorser	Approver
1.0	**7 Sep 26**	Engineering Services	Principal Signalling Engineer	Manager Engineering Services 25/09/2026

Amendment Record

Amendment Version #	Date Reviewed	Clause	Description of Amendment
1.0	7 Sep 26		Document renumbered from ESD-05-14

© Australian Rail Track Corporation Limited (ARTC)

Disclaimer

This document has been prepared by ARTC for internal use and may not be relied on by any other party without ARTC's prior written consent. Use of this document shall be subject to the terms of the relevant contract with ARTC.

ARTC and its employees shall have no liability to unauthorised users of the information for any loss, damage, cost or expense incurred or arising by reason of an unauthorised user using or relying upon the information in this document, whether caused by error, negligence, omission or misrepresentation in this document.

This document is uncontrolled when printed.

Authorised users of this document should visit ARTC's intranet or extranet (www.artc.com.au) to access the latest version of this document.

Table of Contents

1 Introduction 4
1.1 Purpose 4
1.2 Scope 4
1.3 Standard Owner 4
1.4 Responsibilities 4
1.5 References 4
1.6 Abbreviation 5
2 General Requirements 7
2.1 General 7
2.2 Network Compatibility 8
2.3 Type Approval 8
3 Design 9
3.1 Compliance with Signalling Principles 9
3.2 Scheme Design 9
3.3 Wheel Sensor Location 9
3.4 Supervisory Sections 9
3.5 Counting Head Control 10
3.6 Power Supply 10
3.7 Failure Mode 10
4 Installation, Set to Work, Testing & Commissioning 11
4.1 General 11
4.2 Housings 11
4.3 Wheel Sensor – Installation, Check and Adjustment 11
4.4 Wheel Sensor Setup 12
4.5 AEB adjustment: 13
4.6 Setting to Work 14
4.7 Testing & Commissioning 14
4.8 Temporary Decommission 14
4.9 Removal of RSR180 wheel sensors from rail 15
4.10 Reinstallation of the RSR180 Wheel Sensors 15
5 Maintenance 16
5.1 General 16

5.2 AEB adjustment 16
5.3 Fault Diagnostics 17
6 Appendix 18
6.1 List of Manufacturer's Documents 18

1 Introduction

1.1 Purpose

This standard provides the minimum requirements for use of Frauscher axle counter systems on the ARTC rail network.

1.2 Scope

This standard covers Frauscher axle counters that are type approved for use on the ARTC rail network. It covers the minimum requirements for design, installation, testing & commissioning, and maintenance.

This document is applicable to entire ARTC network.

1.3 Standard Owner

The General Manager - Technical Standards is the Document Owner. For any query, initial contact to be made at standards@artc.com.au.

1.4 Responsibilities

Project Manager, Project Signal Engineer, Signal Design Engineer, Signal Maintenance Engineer and Business Unit Managers are accountable for implementation of this standard. This is necessary to ensure consistency, maintainability, and reliability of the Signalling System.

The supplier is responsible for compliance and confirmation to this document and applicable Australian and International standards.

1.5 References

1.5.1 ARTC Documentation

CoP	- Section 1 Rail
WOS 01.100	- General Interface Requirements
WOS 01.200	- Common Interface Requirements
ESD-05-13	- Resetting of Axle Counter Systems
ESD-05-15	- Design of Frauscher Axle Counters
ESC-07-04	- Install of Equipment Racks and Termination of Cables and Wiring
ESC-03-01	- Level Crossing Equipment
ESC-07-03	- Small Buildings, Location Cases, Terminal Cases and General Purpose Cases
ESC-09-02	- Lightning and Surge Protection Requirements
ESC-07-01	- Installation of Trackside Equipment
ESA 11 01	- Cables for Railway Signalling Applications – General Requirements
ESC-11-01	- Construction of Cable Route and Associated Civil Work
ESC-21-01	- Inspection and Testing of Signalling – Roles, Responsibilities and Authorities
ESC-21-02	- Inspection and Testing of Signalling – Plans, Programs, Documentation and Packages

ESC-21-03	- Inspection and Testing of Signalling – Inspection and Testing Principles
ESM-26-02	- Signalling Technical Maintenance Plan
ESW-26-01	- Signalling Service Schedule
ESS0506F-01	- Axle Counter History Card

1.5.2 Australian and International Standards

AS 7651	- Axle Counters
AS 7715	- Train Detection
AS 7717	- Signal Testing and Commissioning
AS 7770	- Rail Cyber Security
AS/NZ- 1768-2007	- Lightning Protection
AS 4070:1992	- Recommended practices for protection of low-voltage electrical installations and equipment in MEN systems from transient over voltages
AS/NZS 61000	- Electromagnetic Compatibility
EN 50121	- Railway Application – Electromagnetic compatibility.
EN 50125-3	- Railway Application –Environmental Conditions for equipment, Part 3: Equipment for signalling and communications
EN 50126	- Railway applications – The specification and demonstration of Reliability, Availability, Maintainability and Safety (RAMS)
EN 50159	- Railway applications – Communications, Signalling and Processing Systems – Safety Related Communications in transmission systems
EN 50468:2009	- Resistibility requirements to overvoltage and overcurrent due to lightning for equipment having telecommunication ports
EN 50617-2	- Railway application – Technical parameters of train detection systems for the interoperability of the Trans-European railway system – Part 2 Axle Counter
EN 61663-1:2000	- Lightning protection. Telecommunication Lines. Fibre optic installations
EN 61663-2:2001	- Lightning Protection - Telecommunication Lines - Part 2: Lines Using Metallic Conductors
EN 62305	- Protection against lightning

1.5.3 Manufacturer's Documentation

Manufacturer documentation for use and referred to in this standard is listed in the Appendix section 6.

1.6 Abbreviation

For the purpose of this document, the terms and definition are as follow:

ASD	Advance Service Display
AEB	Advanced Evaluation Board
FDS	Frauscher Diagnostic System

IO-EXB	Input/Output Board
GAK	Axle Counter Trackside Disconnection Box
OEM	Original Equipment Manufacturer
SAP	Signal Arrangement Plan
TIP	Track Insulation Plan

2 General Requirements

2.1 General

Axle counter system is a train detection system which detects the number of axles that enter and/or exit a section of track using wheel sensors mounted to the rail. When placed at the entrance and exit to a track section axle counters can be used by a signalling system to identify whether a track section is clear of detectable rail vehicles. An axle counter system typically comprises of the following items.

- Counters and evaluators.
- Communications and Interfaces.
- Trackside cables.
- Wheel sensors.

Axle counter systems used for signalling and train control system shall be SIL 4 rated. Axle counter systems and equipment used in safety critical vital application shall be designed to avoid failure modes that give rise to unsafe conditions. Safety risks shall be eliminated or minimised so far as is reasonably practicable. Communications system used for axle counter system should meet the requirements of the axle counter system and comply with EN 50159.

For all new works, FAdC R2 system shall be used.

2.2 Network Compatibility

2.2.1 Track

Recommended values of rail dimensions as listed in Frauscher technical manual (D1414 – Mounting, Commissioning and Maintenance – RSR 180) are to be complied with.

2.2.2 Vehicle

Designer to confirm the OEM requirements from the manufacturer technical manual (D1413 – Application Guideline Wheel Sensor RSR 180) for vehicle and wheel dimensions and ensure its compliance.

Designer to ensure compliance to the below parameters in the design.

	Minimum	Maximum
Acceleration a	-	$1 m/s^2$
Speed v	0 kmph	210 kmph
Vehicle Geometry		
Wheel Diameter d	523 mm	2100 mm
Wheel flange thickness Sd	17.8 mm*	33 mm
Wheel flange height Sh	28 mm	38 mm
Angle α	0°	5°
Angle β	0°	25°
Lateral wheel displacement	0 mm	60 mm
If '"-"is entered in the column "Minimum" and/or "Maximum", then the respective parameter is not relevant.		
* - Minimum wheel flange thickness is only for metal part and does not include air gap or measurement error.		

Designer to refer Frauscher document D5686 Version 6 – Project specific documentation - Vehicle type 20 – RSR180.

Designer to refer ARTC rollingstock standards WOS 01.100 and WOS 01.200 for more information about ARTC rollingstock.

2.3 Type Approval

Only type approved axle counter equipment is permitted to be used.

3 Design

3.1 Compliance with Signalling Principles

Application of axle counters must be consistent with the Signalling Principles and the design of an axle counter system is required to comply with the following documents:

- AS 7651 – Axle Counters
- AS7715 – Train Detection
- AS 7711 – Signalling Principles
- ARTC Type Approval Certificate conditions applicable to the axle counter type
- ESD-05-15 Design of Frauscher FAdC ® Axle Counter Train Detection Systems
- ESD-05-13 – Resetting of Frauscher Axle Counter System
- Axle Counter manufacturer 's documents (refer appendix section 6.1.1)

3.2 Scheme Design

Axle counters may be utilised either by themselves in a signalling scheme or as an overlay to a track circuited area. The minimum track section using axle counters must be longer than the longest wheelbase of rail vehicles. For ARTC, the nominated minimum track section length is 30 metres.

Maximum length of axle counter track section is determined by consideration of max tolerable latency combined with max latency permitted by the specific communications network used.

In areas where axle counters are in use, axle counter wheel sensors must be designed and placed such that all available rail paths are reliably detected.

In areas where supervisory sections are in use, additional axle counter heads may be provided as set out in section 3.4.

The design of axle counter sections should in general be based on the operational needs for train movements. The position of axle counter heads over the points shall extend at least as far as the clearance point. Failure of safety critical function shall result in a system failure with track section occupied.

3.3 Wheel Sensor Location

Wheel sensor location design should consider placement of wheel sensors in easy to access area and minimise the requirement to cross track to get to the equipment.

Wheel sensor to be installed back from fouling point to avoid overhang hazard

Wheel sensor location design should avoid placement on high wear rails where possible i.e. outer rail on curves and to be installed away from weld and rail joints.

3.4 Supervisory Sections

A supervisor section is a regular track section that can be configured additionally to cover several consecutive track sections. These consecutive track sections are monitored by the supervisor section and can be automatically reset in case of an axle counting fault within the supervisor section. A supervisor section can increase the availability without any additional equipment.

Supervisory section is a design feature which allow miscount from a single wheel sensor to be reset based upon correct counts from the 2 adjacent wheel sensors. For example, if 40 train axles pass through 3 consecutive wheel sensors and counts correctly on the first and last sensors but

miscounts by 1 on the wheel sensor in the middle. It will leave a count of 1 in one of the sections and -1 in the other section. The supervisory section that consists of the outer sensors will see that the outer sensors correctly counted 40 axles in and out of the supervisory section thereby indicating that the supervisory section is clear of axles. This should allow the supervisory section to automatically reset the intermediate track sections with the miscount.

The function of supervisor section is to comply with SIL4 requirements under the conditions stated in Frauscher document D4181 – Design and application of Supervisory Sections Frauscher Advanced Counter FAdC R2.

Use of supervisory sections are permissible, subject to design risk assessment and justification for a particular scheme in agreement with business unit – signal maintenance engineer.

Where supervisory sections are to be used at the boundary between axle counter train detection and another form of train detection, duplicated wheel sensors (one wheel sensor on each rail) to be considered in accordance with Frauscher design and application manual.

Supervisory sections shall not be defined and configured to extend across a crossover such that it would start and end on separate parallel tracks.

3.5 Counting Head Control

Counting Head Control (CHC) is a functionality of the axle counter system to minimise the faults and increase the availability of the system e.g. in case of track maintenance or faults due to non-wheel metallic objects.

The function of CHC is to comply with SIL4 requirements under the conditions stated in Frauscher document D4183 – Design and application of Counting Head Control Frauscher Advanced Counter FAdC R2.

Use of Counting Head Control is permissible, for a particular scheme and designer may decide to restrict the maximum count without a track occupancy being registered based on the design risk assessment and in agreement with business unit – signal maintenance engineer.

3.6 Power Supply

Axle counter systems shall be supplied by an uninterruptible power supply within range of +19 to +72v DC.

If Axle counters are being installed at such locations where signalling supply is available with backed up UPS/generators, the battery backup shall be 8 hours.

Whereas if axle counter is connected to a non-backed up supply, such as at a council supplied level crossing then separate axle counter battery backup should match the level crossing battery backup timing.

Note: Axle counter systems are sensitive to spikes and over-voltage.

3.7 Failure Mode

Axle counter system shall be designed in a manner that in the event of failure, system shall fail safe so far as is reasonably practicable. Under failure conditions, degraded modes of operation shall be provided in order to minimise the need, to rely upon human action for safety-critical tasks.

4 Installation, Set to Work, Testing & Commissioning

4.1 General

All installation works need to be carried out in accordance to manufacturer's manuals and approved signal design.

4.2 Housings

Equipment housings, cable routes and trackside equipment must comply with

- ESC-07-03 Small Buildings, Location Cases, Terminal Cases and General-Purpose Cases.
- ESC-07-01 Installation of Trackside Equipment
- ESA-11-01 Cables for Railway Signalling Applications – General Requirements

Manufacturer's manuals must also be complied with. Refer to Appendix section 6.1 for a listing of documents applicable to each axle counter type.

4.2.1 Indoor Equipment

Axle counter indoor equipment wherever possible shall be installed within a single cardfile housing. Where multiple cardfile housings are required, they should be of the same size for ease of installation mounting.

4.2.2 Outdoor Equipment

Axle counter outdoor equipment shall be installed in accordance with the manufacturer's manuals and with consideration given to access and egress routes within the rail corridor. When installing the local disconnection box (GAK) foundation, care should be taken so that the track formation is not negatively affected by any excavation activities. The local disconnection box (GAK) shall be securely installed, either concreted or bolted in position. GAK shall be labelled with wheel sensor number/s and/or track name/s.

The cable to be used between the BSI in the trackside location and the local disconnection box (GAK) shall be in accordance with ESA-11-01, Section 27 – Appendix 13 – Signal Cables – Axle Counter.

The cable from the local disconnection box (GAK) to the equipment location shall be buried or protected in accordance with ESC-11-01–Construction of Cable Route and Associated Civil Work.

Wheel sensors to be installed with approved rail claw, not by drilling through rail.

4.3 Wheel Sensor – Installation, Check and Adjustment

Correct positioning of the RSR180 wheel sensor shall ensure rail vehicle wheels are accurately detected. Checks and adjustments (if required) are to be done after:

- Setting up a new RSR180 wheel sensor
- Changing position of the RSR180 wheel sensor
- Rails have become heavily worn
- After civil works such as rail grinding, tamping and re-railing
- Defect warnings are recorded in the diagnostic logs
- Maintenance activities

RSR180 wheel sensors positioning and installation to be performed as below:

1. Refer measurement 'A' of Figure 6 - Mounting of RSR180 wheel sensor. Measure the distance from the top of wheel sensor to top of rail head. This measurement must be between 40mm and 45mm, However, OEM recommends to set measurement A within a range of 43mm to 45mm so that measurement A remains within the range for as long as possible as Measurement A becomes shorter over time due to rail wear.
2. Refer measurement 'B' of Figure 6 - Mounting of RSR180 wheel sensor. Measure the distance from the inside top edge of the wheel sensor towards the rail. This measurement must be between 0mm and 8mm, adjust as required. Ensure the wheel sensor is level.
3. Ensure that the wheel sensor is not touching the rail.
4. Refer torque values within Figure 6 - Mounting of RSR180 wheel sensor. Tighten as required. A suitable torque wrench is required.
5. Check for correct mounting bolt and bracket for rail size as per manufacturer recommendation.
6. Go-/No Go gauge may be used to check measurements.

Plaques shall be installed on rail or sleeper bay for identification of wheel sensor.

Please refer D1414 – Mounting, commissioning and maintenance – Wheel sensor RSR180 shall be referred for more details on installation.

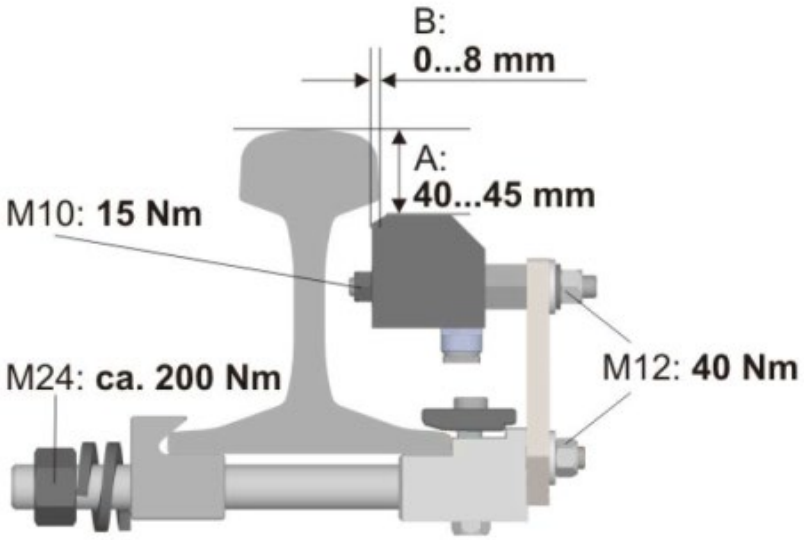

Figure 6- Mounting of RSR-180 wheel sensor

WARNING

The wheel sensor must be adjusted after installation

4.4 Wheel Sensor Setup

The wheel sensor and corresponding AEB received voltage must be between 280mV to 500mV to ensure correct rail vehicle detection.

The following checks are to be performed on the RSR180 wheel sensor when correctly installed on track – refer section 4.3 for positioning requirements:

1. Inspect and measure the position of the RSR 180 wheel sensor as per section 4.3.
2. Measure the received Sys1 and Sys2 voltage without the wheel sensor being dampened.
3. Ensure the difference between the Sys1 and Sys2 current values are no greater than 0.2mA.

4. If values are not within tolerance, following checks to be performed:
   - Values within 100-280mV and/or 500-700mV range, there may be metal parts in the proximity of the RSR180 wheel sensor, recheck wheel sensor mounting and position.
   - >700mV there may be a wire short-circuits or the RSR180 incorrectly connected
   - 0mV there may be no RSR180 connected or an open circuit.
   - <280mV loop resistance on the wheel sensor cable may be too high, check loop resistance is within the recommended values as detailed in D21001 FAdC R2 manual.
   - Sys 1 and Sys 2 difference is >20mV, there may be metal in the proximity of only one system, recheck wheel sensor mounting is level and position is central between bearers and away from metal imbalance i.e. a rail weld
5. Adjust the AEB to ensure up to date reference point is set.
6. Record measurements and adjustment date.

Once the Sys1 and Sys2 values are within tolerance and recorded, perform correspondence testing on the axle counter sections.

CAUTION

The wheel sensor must be level to ensure accurate values

WARNING

Magnetic objects such as multimeter magnetic holders are to be kept at least 1m away from the axle counter system including wheel sensors

4.5 AEB adjustment:

The AEB must be adjusted to ensure the correct reference point is set in correlation to the connected wheel sensor current values.

The following process shall be followed for adjustment of the AEB:

1. Push both toggle switches to the left within 0.5 seconds
2. Keep both toggle switches in this position for at least 0.5 seconds
3. Release both toggle switches within 0.5 seconds
4. Keep both toggle switches in the neutral position for a maximum of 2 seconds
5. Push both toggle switches to the right within 0.5 seconds
6. Keep both toggle switches in this position for at least 0.5seconds
7. Release both toggle switches within 0.5 seconds.

Adjustment should be completed within 5 seconds of successfully following the above adjustment process.

If the Sys1 and Sys2 red lights flash rapidly the adjustment has been unsuccessful. If the Sys1 and Sys2 red lights flash with a 1 second flash frequency, then adjustment is successful.

Note: If adjustment deviates from the above process or takes longer than 30 seconds then adjustment will not take place and the function is inhibited for 6 seconds.

4.6 Setting to Work

Experience with setting to work FAdC systems has shown that many of the faults reoccur and having seen them before, they become more straightforward to identify. The following gives a description of the possible causes:

- Supply voltage not within the range. Boot up requires at least 19V to occur reliably.
- Evaluation board not adjusted
- Wheel sensor current not within specification
- Wheel sensor not mounted/installed correctly
- Direction not configured correctly
- ID DIP switches do not correlate with the design
- FAdC R2 electronic coding missing
- Configuration file incorrect – wrong or no VERIFY, no CRC, VERIFY time before or equal to VERSION time etc.

In all instances personnel should refer to Frauscher FAdC R2 System documentation – D21001.

4.7 Testing & Commissioning

All testing and commissioning activities shall be carried out in accordance with ARTC standards and manufacturer's requirements.

As a minimum, testing of axle counter systems shall include:

a. Adjustments of axle counters
b. correspondence testing between axle counters
c. verification of interface with interlockings
d. physical and system configuration
e. data configuration
f. control table testing
g. communication testing, including change over to standby links

4.8 Temporary Decommission

The following civil works affect axle counters and require special precautions to be taken:

- Re-railing
- Rail grinding
- Tamping
- Track stabilisation
- Ballast cleaning
- Ballast regulation
- Ballast ploughing
- Re-sleepering
- Welding

In these events, the wheel sensors may need to be disconnected from the rail and temporarily stored away from the works being carried out.

Where it is determined that the wheel sensor can be safely left on the rail for the period of the planned works, the BSI shall be removed and secured, and the BSI socket clearly labelled. This

is to avoid inadvertent reinsertion of another BSI and resetting of the axle counter section before the works have been completed.

CAUTION

Metal objects are to be kept at least 1m away from wheel sensors

4.9 Removal of RSR180 wheel sensors from rail

Prior to the civil works commencing, the following shall be performed by competent signalling personnel for each axle counter affected by the works:

1. Record the values of axle counter, noting that the readings were taken prior to civil works. Confirm readings are consistent with previous readings recorded.
2. Take a measurement from the nearest fixed point of infrastructure that will not be affected by the planned works to the wheel sensor being removed. This is to ensure that the wheel sensor is replaced in the same location following the planned works. This can be critical around clearance points between running lines. Plaque name plate should be installed to identify the correct location of the wheel sensor.
3. On the IBA;
   a. book the axle counter wheel sensor out of use
   b. book the track sections affected by that wheel sensor out of use.
4. Remove the RSR180 wheel sensors and clamp from the rail. Keep the cabling connected. Move the wheel sensor clear of the works to be carried out.
5. Ensure the track section(s) are indicated as occupied.

4.10 Reinstallation of the RSR180 Wheel Sensors

After completion of the civil works, the following shall be performed by competent signalling personnel for each axle counter affected by the works:

1. Reinstall the wheel sensors onto the rails at the same position. Ensure the following:
   a. Wheel sensors are positioned in accordance with section 4.2.
   b. All wheel sensor clamp bolts shall be tightened by means of torque wrench – refer to section 4.2.
   c. The cables from the wheel sensor to the GAK are laid avoiding loops. i.e. going directly away from the track and then to the GAK.
2. Confirm that system boards are powered up.
3. Record the values of axle counter, noting that the readings were taken after civil works. Confirm readings are consistent with previous readings recorded. If required, adjust wheel sensor positions.
4. Adjust each affected wheel sensor to attain mV tolerances as specified in section 4.3.
5. Perform the reset.
6. Certify the Axle Counter back into use.

5 Maintenance

5.1 General

All maintenance works shall be carried out in accordance with ARTC standards and manufacture's requirements.

Preventative maintenance actions shall be undertaken in accordance with published Technical Maintenance Plans and Maintenance Service Schedules.

Maintenance staff are required to observe trends in performance, allowing problems to be detected before they cause a failure. Gradual consistent variations indicate the deterioration of a component. The causes of these problems are to be identified and resolved as per manufacturer's manual.

The Axle Counter History Card (ESS0506F-01) is provided for use by maintenance personnel to record axle counter maintenance activities and asset history. Completed forms shall be managed and retained in accordance with the requirements of the relevant Business Unit.

5.2 AEB adjustment

The AEB must be adjusted to ensure the correct reference point is set in correlation to the connected wheel sensor current values.

5.2.1 ACS2000 – For existing installations only

5.2.1.1 Measurement of Wheel Sensor currents

For measurement of wheel sensor currents wheel sensor voltages proportional to the currents are measured at the test sockets via a 100 Ohm shunt. Thus 100 mV equals a system current of 1 mA. The sensor current in system 1 and system 2 must have a value between 2.8 mA and 5.0 mA, which equals 280 mV and 500 mV DC at the test sockets.

5.2.1.2 Adjustment of the IMC Evaluation board

Apart from commissioning of new installation, adjustment of the IMC board is also required after replacement of the IMC board, replacement of the wheel sensor or removal and reinstatement of a wheel sensor due to repair, cleaning or track work or in case of changes in the cable run (changes in loop resistance).

Prior to adjustment, it is necessary to verify that the wheel sensor connected to the IMC board was correctly installed.

During the adjustment procedure the wheel sensor connected to the IMC board must not be damped, as adjustment under such conditions is not completed or will be faulty.

Prior to adjustment, measure system currents as in 5.2.1.1 above.

5.2.1.3 Adjustment

- At the IMC to be adjusted push the switches (TA1 and TA2) simultaneously to the left in direction "Adjust" (simultaneous meaning within 500 ms).
- Both switches must remain in this position for at least 500ms.
- Release both switches simultaneously within 500 ms.
- Switches must not remain in normal position for more than 2 seconds.
- Push both switches simultaneously within 500 ms to the right in direction "Test".
- Both switches must remain in this position for at least 500ms.
- Release both switches simultaneously within 500 ms.

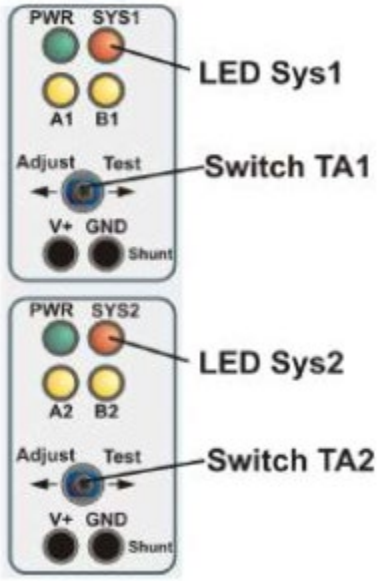

Figure 1 - Switches used for Calibration on IMC Evaluation Board

5.3 Fault Diagnostics

LED diagnostic indications and an LCD readout are provided on the front of the IO-EXB and can be used to assist with the diagnoses of any system fault:

1. The IO-EXB LCD display provides fault status in the form of Error codes identified as the letter 'E' with a corresponding number.
2. The LED indication lights on each of the system boards provide general fault status.

Licensed personnel shall refer to the Frauscher FAdC 'System Documentation' manual for error code meanings.

A laptop can be connected to either the I/O-EXB or AEB module via the ASD interface cable – using the correct port on the axle counter module. The ASD interface may be used to download and save the history and status logs.

A laptop can be connected to the Frauscher Diagnostic System (FdS) via an IP network connection using an internet web browser for greater system diagnostics – this can be carried out locally or remotely. Each FdS will have its own IP address and the user will need to know this to access the FdS. The diagnostic tool must be used to download and save the history and status logs. Start dates and times for the log download are to begin at least 24 hours before the disturbance time.

For further information including that applicable to other axle counter types, the manufacturer's documentation listed in the Appendix Section 6 should be referred to.

6 Appendix

6.1 List of Manufacturer's Documents

6.1.1 Frauscher FAdC R2 Axle Counter System

D21001	System Documentation FAdC
D21000	Brief description – Frauscher Advanced Counter FAdC® R2
D21004	Brief description Advanced Service Display ASD101
D1413	Application Guide for wheel sensor type RSR180
D1414	Mounting and Commissioning of wheel sensor type RSR180
D4183	Design & Application of Counter Head Control for Axle Counting System FAdC R2
D4181	Design & Application of Supervisor Sections for Axle Counting System FAdC R2
D4182	Reset Options for the Axle Counting System FAdC R2
D3668	Questionnaire for Project FAdC & ACS2000
D4736	Configuration Questionnaire FAdC R2 and FAdCi R2
D21003	Checklists for SABs FAdC R2
D5686	Project specific documentation FAdC R2 – Vehicle Type 20 – RSR180

6.1.2 Frauscher FAdC R1 Axle Counter System – For existing installation only

FAdC 20002	Installation / Operation Frauscher Advanced Counter FAdC 2.1.x.x-1 & FAdC 2.1.x.x-3
FAdC 20003	Maintenance Frauscher Advanced Counter FAdC 2.1.x.x-1 & FAdC 2.1.x.x-3
FAdC 20001	Design & Planning Manual Frauscher Advanced Counter FAdC 2.1.x.x-1 & FAdC 2.1.x.x-3

6.1.3 Frauscher ACS2000 Axle Counter System – For existing installations only

D1002-01	Part I	Structure of Documents
D1002-02	Part II	System Description
D1002-03	Part III	Performance Data
D1002-04	Part IV	Project Planning
D1002-05	Part V	Types of Boards
D1002-06	Part VI	Commissioning
D1002-07	Part VII	Acceptance
D1002-08	Part VIII	Maintenance

D1002-09	Part IX	Diagnostics
D1002-10	Part X	Operation
D1002-11	Part XI	Safety Regulations
D1002-12	Part XII	Specification of Boards